



TOPP

tecnologie del movimento

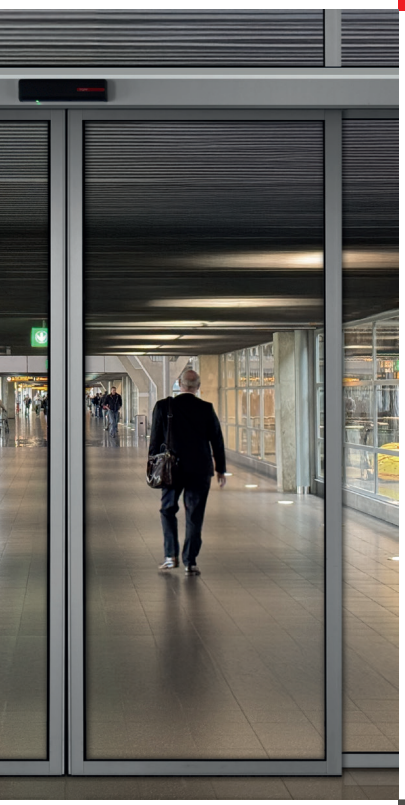



CATALOGUE

Door Automation

Window Automation



CATALOGUE
Door Automation
Window Automation

TOPP
tecnologie del movimento

TOPP
tecnologie del movimento

WHO WE ARE 4
MISSION 4
MADE IN ITALY 6
RESEARCH AND INNOVATION 6
QUALITY 7
CUSTOMER ORIENTATION 7

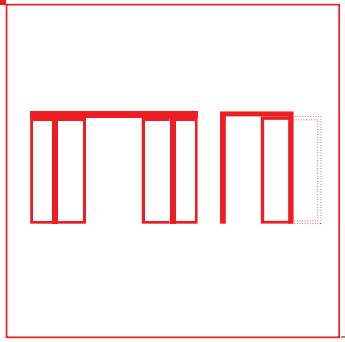

DOOR AUTOMATION

8

AUTOMATIC SWING DOOR OPERATORS
S200 max capacity 250 kg 12
M200 max capacity 250 kg 14

MODULAR SYSTEM FOR AUTOMATIC SLIDING DOORS
DUEVILLE max capacity 200 kg 22

AUTOMATIONS FOR INTERIOR SLIDING DOORS
V1 V1E max capacity 70 kg 28

AUTOMATIONS FOR LINEAR SLIDING DOORS
K160 K250 max capacity 160 kg - 250 kg 30
K300 K600 max capacity 300 kg - 600 kg 32
K200R max capacity 200 kg 34
K200T K280T K280TR max capacity 200 kg - 280 kg telescopic 36
INSTALLATION TYPES 38
DOOR AUTOMATION PRICE LIST 40

AUTOMATIONS ASSEMBLY KITS
K160 K250 K300 K600 46
K200T K280T 48
ACCESSORIES FOR ASSEMBLY KITS 49

ACCESSORIES 50

SPARE PARTS 56

DOOR PANELS PROFILES
F30 PROFILE FOR SLIDING DOORS 60
P35 PROFILE FOR SLIDING DOORS 62
P45 PROFILE FOR SLIDING DOORS 66

TECHNICAL DRAWINGS 70
K160 K250 DIMENSIONS 71
K300 K600 DIMENSIONS 72
K200T - K280T - K280TR DIMENSIONS

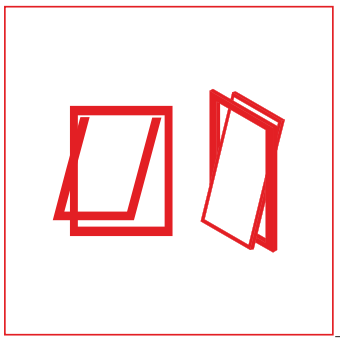

WINDOW AUTOMATION

76

CHAIN ACTUATORS

C20	Thrust force 300N max stroke 360 mm	80
C30	Thrust force 300N max stroke 380 mm	82
C40	Thrust force 400N max stroke 500 mm	84
C50	Thrust force 500N max stroke 1000 mm	86
C60	Thrust force 300N max stroke 600 mm	88
ACK4	Thrust force 300N max stroke 400 mm	90
C130	Thrust force 300N max stroke 360 mm	92
C160	Thrust force 300N max stroke 600 mm	94

DOUBLE CHAIN ACTUATORS

C240	Thrust force 400N max stroke 360 mm	96
C260	Thrust force 600N max stroke 600 mm	98

LINEAR STEM ACTUATORS

S80	Thrust force 800N max stroke 1000 mm	100

RACK ACTUATORS

T50	Thrust force 500N max stroke 1000 mm	102

CONTROL AND POWER UNITS

TF23R | TF33R | TF24R | TF44R | RR | MEM/AL | RW | RDC | TR8 | TR4 104

WIFI BOX 106

ACTUATORS FOR SMOKE EVACUATION SYSTEMS

C50 RWA	Thrust force 500N max stroke 1000 mm	110
ACK4 RWA	Thrust force 300N max stroke 400 mm	112
C160 RWA	Thrust force 300N max stroke 600 mm	114
C160 RWA DOUBLE CHAIN	Thrust force 600N max stroke 600 mm	116
S80 RWA	Thrust force 800N max stroke 400 mm	118
A90	Swing max. opening angle 90°	120

MULTI-POINT LOCK DRIVES

M00 122

CONTROL UNITS FOR SMOKE EVACUATION

RWA CONTROL UNITS 124

DETECTORS AND EMERGENCY DEVICES

RW | RDC | RM2 | TM2 | RT4 | MS-BL4 126

TECHNICAL REMARKS 130

who we are

TOPP offers a wide range of devices, simple and functional for the automation of doors and windows designed to simplify our daily movements.

Our commitment is to bring you the benefits of a smooth and clean experience with windows and doors automation.

Our key values are:

- Expertise in innovation
- Proved quality
- Customer-oriented approach

TOPP
tecnologie del movimento

mission

To be more than a simple manufacturer of automations for doors and windows and go beyond customer expectations. An accurate industrial design enables the development of innovative products enhanced by a complete service, from consultancy to installation through selected and reliable partners



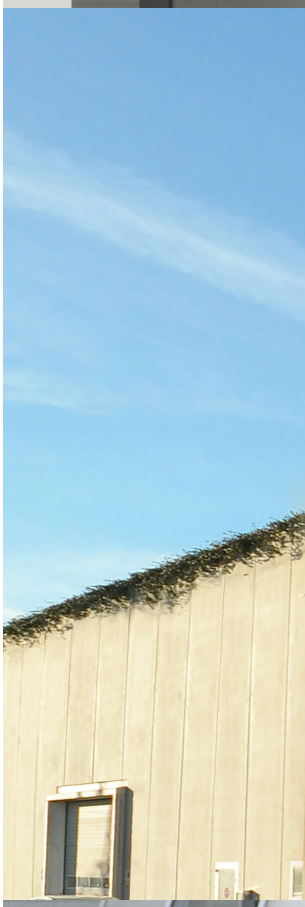











TOPP
tecnologie del movimento

made in italy

Countless international patents, essential for the protection of the TOPP solutions, confirm our natural vocation: a constant search for the perfect balance between design, function, technology and creativity for the development of products renowned worldwide as “Made in Italy”

balance between design, functionality, technology and creativity

research and innovation

We started from the very beginning, back in 1996, by offering our engineering know-how as a service bureau and high product innovation has been our focus ever since. The use of state-of-the-art 3D engineering tools and the aid of laser sintering systems for rapid prototyping accelerate the process of study and industrialization of the products and have brought Topp to the registration of over 50 international patents.

Innovation is our tradition

product quality

Proven quality means state of the art raw materials, technical know-how, full production process monitoring and the availability of a well-organized and efficient testing laboratory. After being produced, each device is tested individually in order to fulfill our commitment to quality. Product value is flanked by service quality, from the pre-feasibility analysis to the after-sales service.

Each device is tested individually:
Your satisfaction is our success.

long-term customer oriented approach

Customer orientation means keeping full focus on the market wants and needs: observing, feeling and listening to the customer requirements. Cooperation starts from the pre-sales activity, suggesting the most suitable product for his needs and grows up to the after-sales stage managing customers concerns and meeting them at their business environment.

Our major effort is to build long-lasting relation ships with sales partners all over the world.

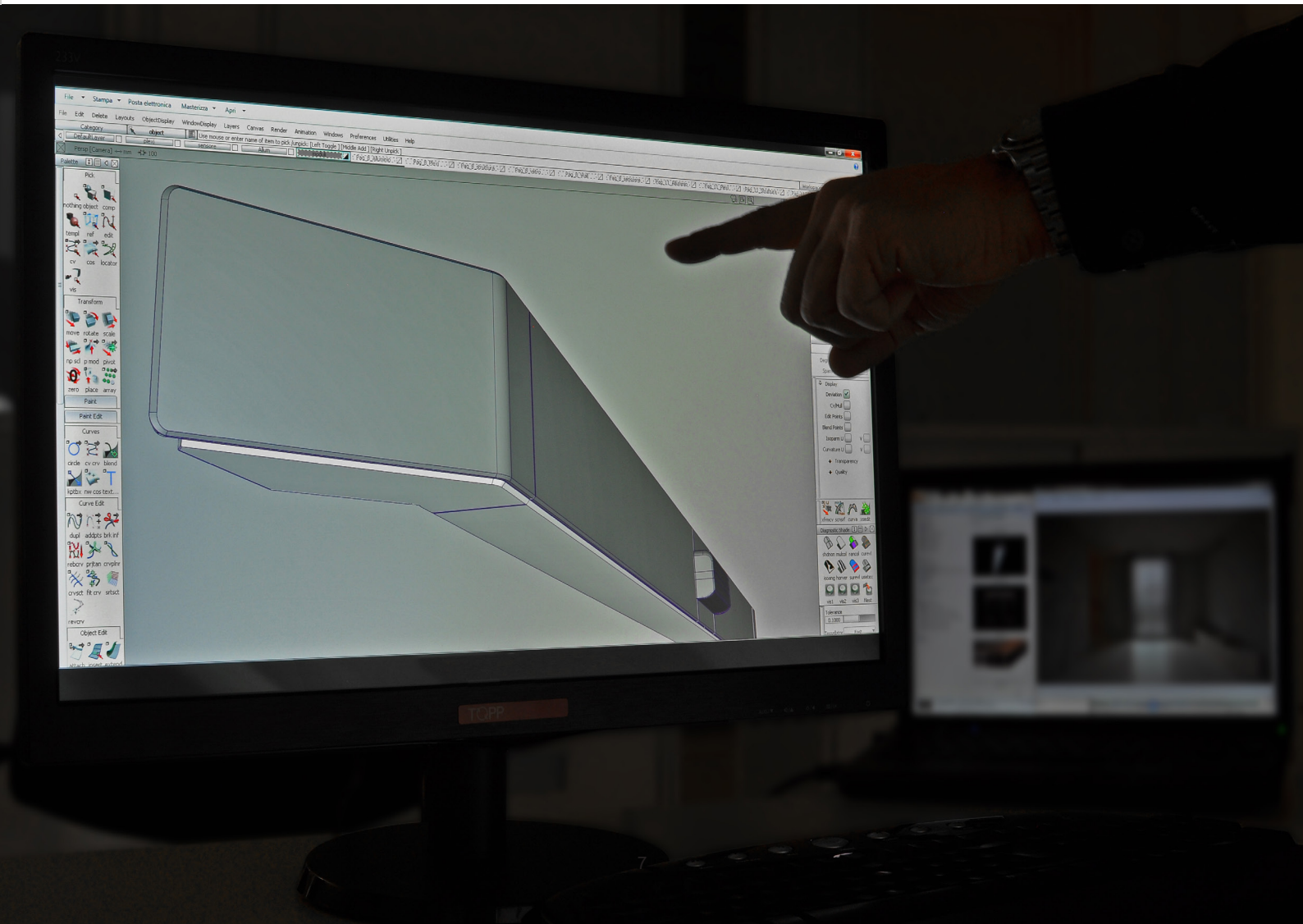

TOPP
tecnologie del movimento

DOOR AUTOMATION

A line of automatic operators for pedestrian doors,developed and produced on principles of quality, reliability and design.
Innovative technological solutions, microprocessor control circuitry, maximum solidity and reliability; structural strength guaranteed by the choice of materials, suitable to withstand any effort or stress; harmonious, elegant minimalist design, appropriate for even the most demanding architectural solutions.

S200
Pag.12



Automatic
swing door operator
Max. capacity 250 Kg

M200
Pag.14



Automatic
swing door operator
Max. capacity 250 Kg

DUEVILLE
Pag.22



Modular system
for automatic entrances
Max. capacity 200 Kg

V1
Pag.28



Automation
for interior sliding doors
Max. capacity 70 Kg

V1E
Pag.28



Automation
for interior sliding doors
Max. capacity 70 Kg

K160
Pag.30

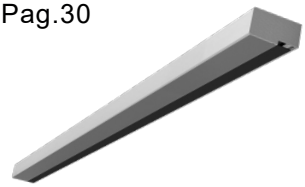

Automation
for pedestrian sliding doors
Max. capacity 160 Kg

K250
Pag.30

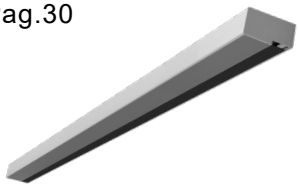

Automation
for pedestrian sliding doors
Max. capacity 250 Kg

K300
Pag.32



Automation
for pedestrian sliding doors
Max. capacity 300 Kg

K600
Pag.32



Automation
for pedestrian sliding doors
Max. capacity 600 Kg

K200R
Pag.34



Automation
for redundant sliding doors
Max. capacity 200 Kg

K200T
Pag.36

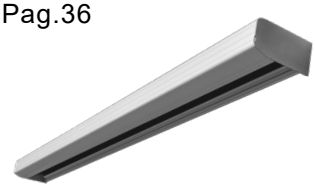

Automation
for telescopic sliding doors
Max. capacity 200 Kg

K280T
Pag.36

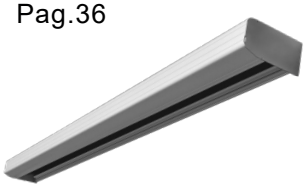

Automation
for telescopic sliding doors
Max. capacity 280 Kg





Automatic swing door operator

S200

Max. capacity 250 Kg



PRODUCT DESCRIPTION

Automatic door operator TOPP, model S200 with return spring, for pedestrian swing doors. May be used for doors with 700mm widths with maximum weight of 250kg and 1200 widths with maximum weight of 130kg respectively. Power supply 230V~ 50 Hz.
With a minimalist and sober design, is the ideal solution for prestigious environments, both residential and commercial: shops, offices, hotels and other situations that require an automatic swing door. Simple and easy to install due to the fitting plate, the adjustable settings on the electronic board and the side switches for the power supply, functions and reset selection.
In compliance with the EN16005 Standard, the S200 works in either Full Power and Low Energy modes. The Low Energy mode does not require safety sensors due to the electronic control of force and weight. Due to the combination of 3 different types of arm - slide track arm, push arm and elbow slide track arm - with extension systems, the mechanism is very easy to configure and can be adapted to any wall and door type. In case of a power failure, a long-life battery pack will assure the operator's functioning.
S200 tested in accordance with the EN1634-1 Standard (fire resistance test).

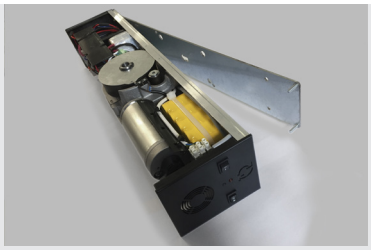

Fitting plate for an easy installation to the wall.

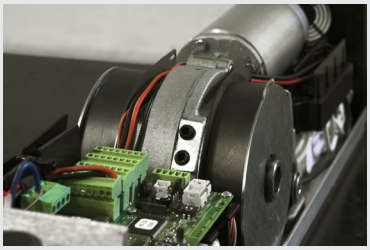

Full Power or Low Energy modes can be easily selected from the electronic board.

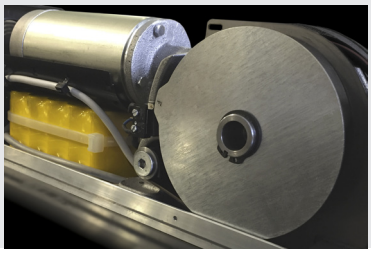

On-board batteries without automation changes on dimension.



TECHNICAL SPECIFICATIONS	S200
Power supply	230V ~ 50/60 Hz
Operation modes	Full Power or Low Energy
Working system	Opening by motor – Closing by spring
Power supply for external accessories	24V - 500mA max
Absorption	1 A
Absorbed power	230W
Durability	1.000.000 cycles
Max. opening speed	50°/second
Adjustment of automatic closing time	from 0 to 60s
Max. door-panel weight	250kg for panel 700mm – 130kg for panel 1200mm
Clear passage width	
with push arm	min 600mm – max 1600mm
with slide track arm	min 650mm – max 1600mm
with elbow slide track arm	min 700mm – max 1600mm
Max. opening angle of push arm:	115°
Max. opening angle of slide track arm	95°
Dimensions	580mm x 130mm x H110mm

S200

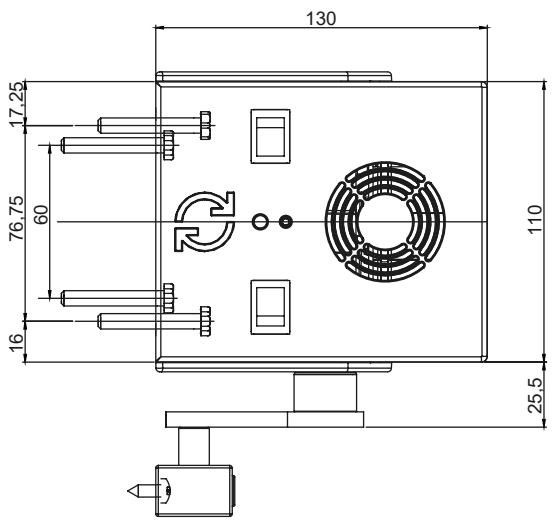

Automatic swing door operator

M200

Max. capacity 250 Kg



PRODUCT DESCRIPTION

Automatic door operator TOPP, model M200, for pedestrian swing doors. May be used for doors with 700mm widths with maximum weight of 250kg and 1200 widths with maximum weight of 130kg respectively. Power supply 230V~ 50 Hz. With a minimalist and sober design, with an elegant aluminium cover, is the ideal solution for prestigious environments, both residential and commercial: shops, offices, hotels and other situations that require an automatic swing door. Simple and easy to install due to the fitting plate, the adjustable settings on the electronic board and the side switches for the power supply, functions and reset selection. In compliance with the EN16005 Standard, the M200 works in either Full Power and Low Energy modes. The Low Energy mode does not require safety sensors due to the electronic control of force and weight. Due to the combination of 3 different types of arm - slide track arm, push arm and elbow slide track arm - with extension systems, the mechanism is very easy to configure and can be adapted to any wall and door type. In case of a power failure, a long-life battery pack will assure the operator's functioning.

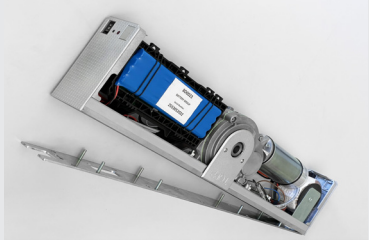

Fitting plate for an easy installation to the wall.

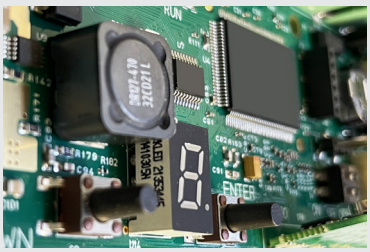

Full Power or Low Energy modes can be easily selected from the electronic board.



On-board batteries without automation changes on dimension.



TECHNICAL SPECIFICATIONS	M200
Power supply	230V ~ 50/60 Hz
Operation modes	Full Power or Low Energy
Working system	Opening by motor – Closing by motor
Power supply for external accessories	24V - 500mA max
Absorption	0,65 A
Absorbed power	150W
Durability	1.000.000 cycles
Max. opening speed	50°/second
Adjustment of automatic closing time	from 0 to 60s
Max. door-panel weight	250kg for panel 700mm – 130kg for panel 1200mm
Clear passage width	
with push arm	min 600mm – max 1600mm
with slide track arm	min 650mm – max 1600mm
with elbow slide track arm	min 700mm – max 1600mm
Max. opening angle of push arm:	115°
Max. opening angle of slide track arm	95°
Dimensions	643mm x 137mm x H76mm

M200

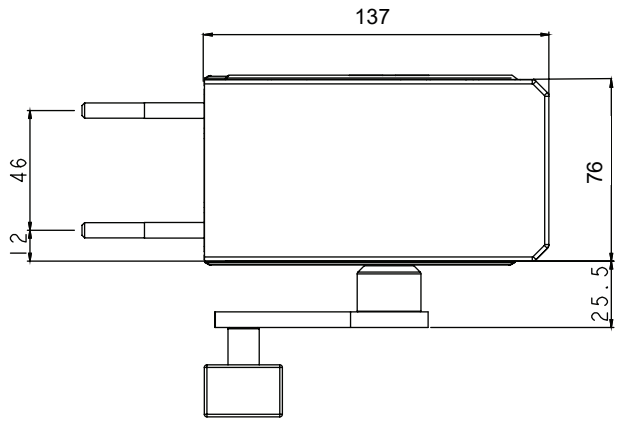

S200 AND M200 AUTOMATIC SWING DOOR OPERATORS

Max. capacity from 250kg for leaf 700mm to 130kg for leaf 1200mm

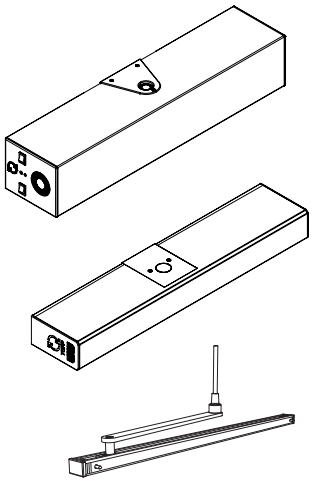

3S10010	S200 - automatic swing door operator with spring and on-board battery (250kg for leaf of up to 700mm – 130kg for leaf of up to 1200mm)
3S11010	M200 - automatic swing door operator with on-board battery (250kg for leaf of up to 700mm – 130kg for leaf of up to 1200mm)
3S1020	SA1Slide track arm (for overlap depths from 0 up to max. 30 mm)
3S1010	AA1 Push arm (for lintel depths from 0 up to max. 100mm)
3S1011	AA2 Push arm (for lintel depths from 101 up to max. 200mm)
3S1012	AA3 Push arm (for lintel depths from 201 up to max. 300mm)
3S1030	EA1 Elbow slide track arm (for lintel depths from 0 up to max. 100mm)
3S1031	EA2 Elbow slide track arm (for lintel depths from 101 up to max. 220mm)
3S1100	PS1 Arm extension 25mm
3S1101	PS2 Arm extension 50mm
3S1102	PS3 Arm extension 75mm
3S1180	KIT S200 operator junction cover for double swing door (2 m)
3S1181	KIT M200 operator junction cover for double swing door (2 m)

Note: Electronic board with on-board receiver and possibility to control through TS1S radio remote control selector (as an alternative to MS2 and KS2 selectors).



S200 AND M200 ACCESSORIES

	8E1725	WS6 Microwave unidirectional activation sensor
	8E1736	IS6M Master safety sensor for swing doors (length 900mm) – black. Certified according to EN16005
	8E1737	IS6S Slave safety sensor for swing doors (length 900mm) – black. Certified according to EN16005
	8E1771	BF1 2 pieces Flatscan technology safety sensors – white
	8E1772	BF1 2 pieces Flatscan technology safety sensors – black
	8E1058	Remote control for BF1 setting
	8E1810	MS2 Analog functions selector for swing door automation
	8E1880	KS2 Analog functions selector key operated for swing door automation
	8E1083	KC1S Key lock switch
	8E1055	TS1S 4-functions wireless selector for swing door automation (open, close, exit onlymode, automatic mode)
	8E1832	DS2S LCD digital function selector with advanced end-user/installer programming functions for swing door automation – white
	8E1833	DS2S LCD digital function selector with advanced end-user/installer programming functions for swing door automation – black
	8E1890	External connector kit for DS2S (with wire L=1m)
	8C0477	SwitchBoxDC Wifi device for the door opening via smartphone or tablet
	8E1166	GO1 Bluetooth module for parameters setting and function selection via the ToppGO App
	8E0304	TG2 2-channels mini rolling code transmitter 868 Mhz
	8E0661	RG2 Mini 1-channel receiver 12/24V 868 Mhz 500 codes

S200 AND M200 ACCESSORIES

	8E1094	HS3 touchless infrared activation switch
	8E1143	HS4T touchless infrared activation switch wireless
	8E1141	HS4R receiver for HS4T
	8E1152	HS2S touchless switch for the activation/deactivation of the electric-lock with occupied/vaccant indication
	8E1091	PU1 Ultra-flat activation push pad
	8E1142	TP1 Fingers anti-entrapment system for automatic swing door hinges (L=1930mm)
	8E1127	EB15 Magnetic electric lock for swing door






L'aroma è di sentori di agrumi e suoni di boccioli dischiusi

Modular system for automatic entrances

DUEVILLE

Max. capacity 200 Kg

PRODUCT DESCRIPTION

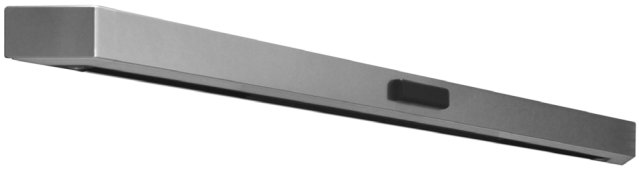

TOPP DUEVILLE modular system for entrances with automatic sliding doors. Includes integrated entrance lighting (LED light diffused through the length of the automation and spot side LED lights) controlled by radio control, maximum 200 kg capacity, continuous use, electronic board with microprocessor of latest generation that allows the motion self-adjustment according to the weight and dimensions of the panels. Built-in safety functions with thrust force control and obstruction detection system that automatically reverses the operation when an obstacle in the doorway is detected. Device with encoder for the automatic reading of stroke, position and slowdown of the panels. Base parameters setting through push buttons on the electronic board and advanced user and installer settings via digital selector. Operating modes selection with manual selector, digital selector or wireless selector. Optional accessories to be installed concealed inside the automation cover: video surveillance kit, sound diffusion kit, tubular motor kit for standard roller blind.
Available leather cover treatments and different textures and colors.
CE certified automation in compliance with the EN16005.

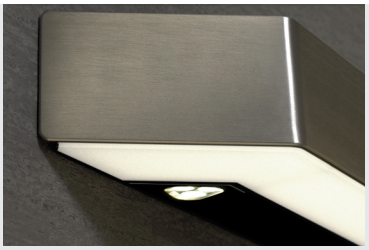

Architectural and aesthetic integration thanks to the elegant design fully expressed by the lighting system.



Interchangeable lateral modulus that allow the realization of corner entrances and access control vestibules.



Full glass free-standing access vestibule that guarantees the highest elegance of aesthetic transparency, releasing the entrance from any disturbing framed structures.



TECHNICAL SPECIFICATIONS

Power supply	230V ~ 50 Hz	
Peripheral power output	24 V 500mA max	
Absorption	1,31 A*	
Absorbed power	286 W*	
Durability	2.000.000 cycles	
Opening/closing speed	adjustable 100 ÷ 800 mm/s	
Opening/closing approach speed	adjustable 1 ÷ 50	
Opening/closing acceleration	adjustable 1 ÷ 12	
Automatic closing time	adjustable 0 ÷ 60 s	
Working temperature	-20°C min +50°C max	
No. of door panels	**1 PANEL**	**2 PANELS**
Maximum capacity	140 kg	100 + 100 kg
Size of opening	800 ÷ 2800 mm	1000 ÷ 2800 mm

*Data refers to a 6m length automation.
To calculate the power consumption of smaller doors the following formula ca be used: P=90+(16)+(24xL), where L is the length of the automation.



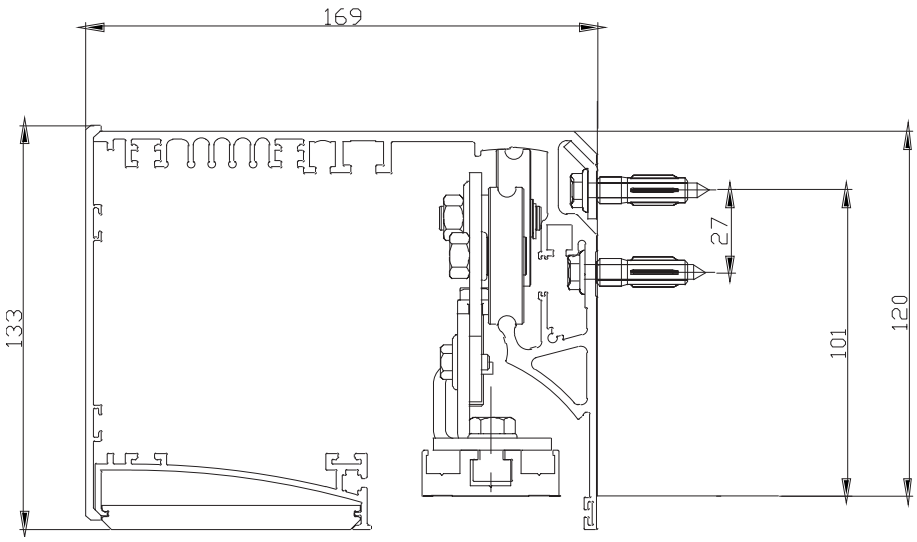
169
133
27
101
120





PL1

Linear automation, LED lighting located under the beam, elements with inclination of 45 degrees and side LED spot lights.





PL2

Linear automation, LED lighting located under the beam, elements with inclination of 90 degrees, without side LED spot lights.

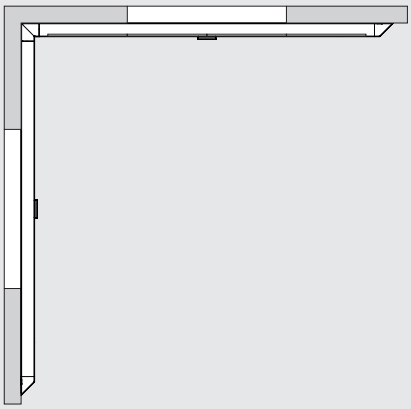



PA1

Corner automation system for two counterposed entrances, LED lighting located under the beam, angular module and elements inclined at 45° and side LED spot lights.

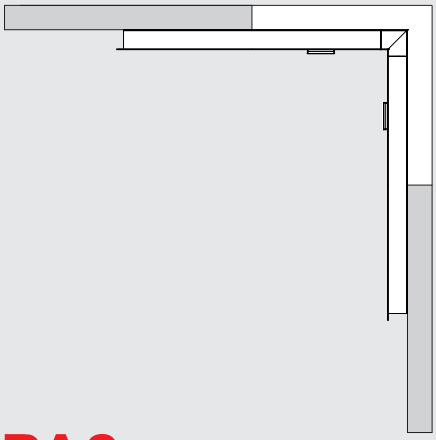

PA2

Automation system for corner entrances, LED lighting located under the beam, angular module and elements with inclination of 90 degrees and side LED spot lights.





PQ1

Automatic vestibule entrance with 2 opposing automatic doors. Perimetral diffused led light under the beam, corner modules for frame construction on all-glass supporting structure.





DUEVILLE FOR LINEAR SLIDING DOORS

AUTOMATION KIT WITH LIGHT ALONG THE BEAM AND 45° SIDE ELEMENTS WITH SPOT LIGHTS

Max load:
140 kg 1 panel
100 kg + 100 kg 2 panels

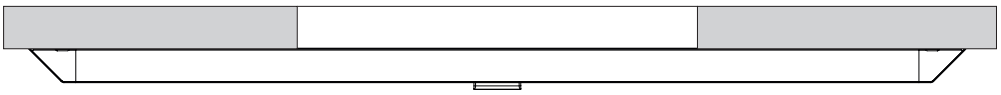

Motor kit
Main beam
LED lighting located under the beam
Elements with inclination of 45 degrees and side LED spot lights
On-board receiver
Remote control for lighting system
IS2 activation and safety infrared sensor

AUTOMATION KIT WITH LIGHT ALONG THE BEAM AND FLAT SIDE ELEMENTS

Max load:
140 kg 1 panel
100 kg+100 kg 2 panels

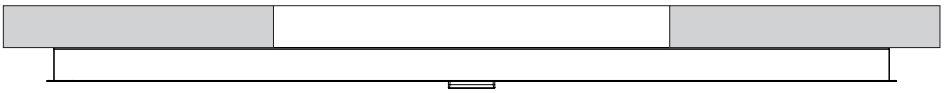

Motor kit
Main beam
LED lighting located under the beam
On-board receiver
Remote control for lighting system
IS2 activation and safety infrared sensor

Note: The operator's length includes elements with inclination of 45 degrees and side LED spot lights. If you use elements with inclination of 90 degrees and no LED spot lights, the crossbeam and the aluminium cover reduce by 230mm and by 195mm per each element, respectively.

ACCESSORI DUEVILLE

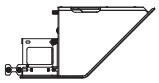	8E3002	Right side kit with inclination of 45° and LED spot ilghts
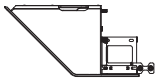	8E3003	Left side kit with inclination of 45° and LED spot ilghts
	8E3000	Right side kit with inclination of 90°
	8E3001	Left side kit with inclination of 90°
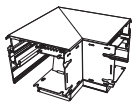	3P6100	Corner kit with inclination of 90° for access control vestibule
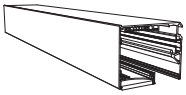	3P61#	Metal cover kit with ceiling light L=1000
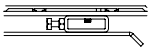	3P69#	Automation supporting structure L=1000
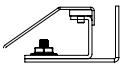	3P6901	Glass edge profiles L=3000
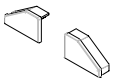	3P6902	Glass edge profiles end caps kit (2 pcs)
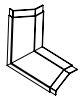	3P6903	Corner kit for vertical glass edge profile (4 pcs)
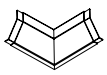	3P6904	Corner kit for horizontal glass edge profile (4 pcs)
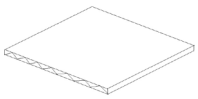	3P69#	Aluminium ceiling with fixing kit (€/square meter)
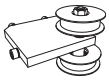	3P6101	Toothed transmission belt kit to realize a corner entrance DUEVILLE
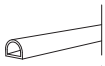	8E1190	Sealing system for glass panel L=3000
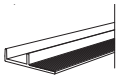	8E1191	40mm diverting seal for glass panel L=3000
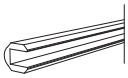	8E1173	P18 Sealing system for 10mm glass panel with flat gasket L=3000

Automations for interior sliding doors

V1E V1

Max. capacity 70 Kg Max. capacity 70 Kg

PRODUCT DESCRIPTION

TOPP door operators, models V1E and V1, for interior sliding doors, max. load 70kg. Power supply 230V~ 50/60 Hz.

- easy installation
- simple adaptability to existing sliding doors
- minimal dimensions and appealing design

V1E and V1 can be easily installed on existing interior sliding doors and complies with the EN16005 standard, “Low Energy Movement” section, that manages the door speed by a sophisticated electronic control with no need of sensors or safety photocells.
V1E and V1 are equipped with an on-board infrared motion sensor.





Fast and easy installation on existing doors.



Telescopic adjustment for fitting to doors from 700 to 1200mm.

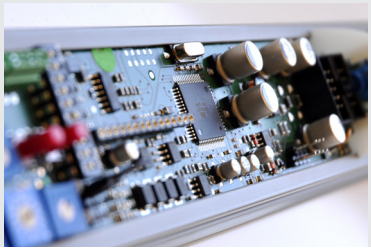

In compliance with EN16005 “standard, Low Energy Movement” section, which avoids the installation of safety sensors or photocells.



TECHNICAL SPECIFICATIONS

Power supply*	230V ~ 50/60 Hz
Peripheral power output	5 V 80mA / 24 V 110mA
Absorption	100mA a 230 V
Absorbed power	15W
Durability	200.000 cycles
Opening/closing speed	in accordance with the EN16005 about “Low Energy Movement” in reference to the panel weight
Panel weight adjustment	from 150N to 700N adjustable every 35N by the installer
Maximum thrust force	67N
Door open waiting time	adjustable from 2 sec to 60 sec
Protection against electric shocks	class II
Working temperature	- 5°C + 50°C
Number of door panels	1 PANEL
Maximum capacity	700N
Size of opening	700 ÷ 1200 mm
Overall dimensions	59x65 mm x variable length 700 - 1200 mm

*24V d.c. operator available upon request



V1E AND V1 AUTOMATIONS FOR INTERIOR SLIDING DOORS

3R21001	V1E Door Operator, silver (with infrared on-board sensor) Max.1000 mm door width Not suitable for our TS8 wireless selector
3R21002	V1E Door Operator, white (with infrared on-board sensor) Max.1000 mm door width Not suitable for our TS8 wireless selector
3R20003	V1 Door Operator, silver (with infrared on-board sensor) Max.1000 mm door width
3R20004	V1 Door Operator, white (with infrared on-board sensor) Max.1000 mm door width
3R20050	V1 Door Operator, silver (with infrared on-board sensor) Max.1200 mm door width
3R20051	V1 Door Operator, white (with infrared on-board sensor) Max.1200 mm door width

V1E AND V1 ACCESSORIES



8E0313	TS8 8-functions radio wireless selector (with magnetic wall-mounting stand) Opening/Closing/Door open or close/ Slow speed mode/Entrance only mode/ Exit only mode/Reset/Automatic mode



8E1075	WS2 Microwave activation sensor



8E1150	HS1 Touchless activation switch



8E1151	HS2 Touchless activation switch for the activation/deactivation of EB1 electric lock



8E1105	EB1 Electric lock with emergency manual release (to be combined with two HS2 touchless activation switch)

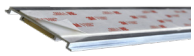

3R1905	GL1 double-sided tape for installing the track on glass panels



3R2004	Glass panel stopper kit



3R1906	V1 Bracket for wall fixing

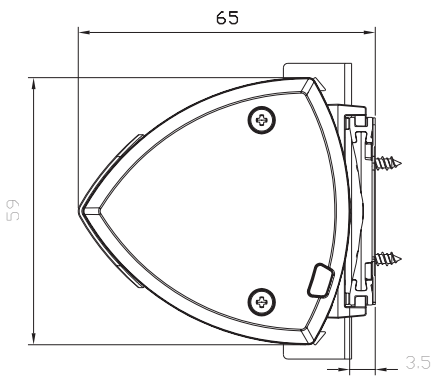

Pedestrian sliding door automations

K160 K250

Max. capacity 160 Kg

Max. capacity 250 Kg

PRODUCT DESCRIPTION

TOPP door automations, models K160 and K250, for pedestrian sliding doors, max. load 160 kg (K160), 250 kg (K250), intensive duty devices, with electronic board with microprocessor of latest generation that allows the motion self-adjustment according to the weight and dimensions of the panels.
Built-in safety functions with thrust force control and obstruction detection system that automatically reverses the operation when an obstacle in the doorway is detected. Motor with encoder for the automatic reading of stroke, position and slowdown of the panels. Parameter setting on the electronic board and advanced setting for user and installer via smartphone, thanks to the Bluetooth device included into the electronic board. Selection of operating modes via manual selector, key selector or wireless via smartphone, by downloading the ToppGo App.
Tested in compliance with the EN16005. CE certified.

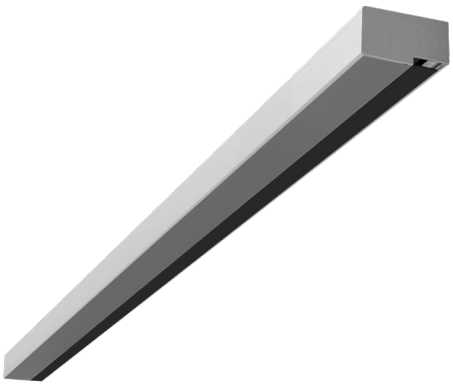

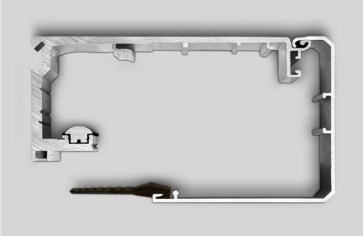

Maximum capacity in minimum size. Automation section 175mm X 100mm. Maximum load 250kg.

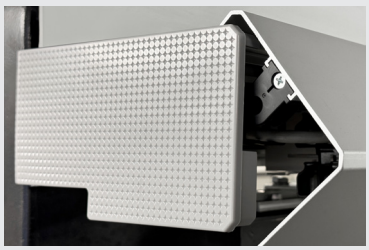

Elegant and clean design free from any visible closing screw. With quick access to all components positioned in front of the automation to simplify the maintenance.

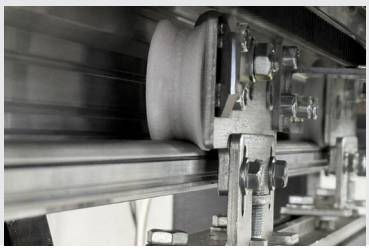

Silent sliding profile and reinforced trolleys to ensure smoothness and maximum load capacity.



TECHNICAL SPECIFICATIONS

	K160		K250	
Power supply	230V ~ 50/60 Hz		230V ~ 50/60 Hz	
Peripheral power output	24V - 500mA max		24V - 500mA max	
Absorption	0,43 A		0,65 A	
Max. power	100 W		150 W	
Standby power	0,5 W		0,5 W	
Durability	1.000.000 cycles		2.000.000 cycles	
Type of use	Semi-intensive		Intensive	
Opening/closing speed	Adjustable 100 ÷ 800 mm/s		Adjustable 100 ÷ 800 mm/s	
Opening/closing approacing speed	Adjustable 1 ÷ 50 mm/s		Adjustable 1 ÷ 50 mm/s	
Automatic closing time	Adjustable 0 ÷ 60 s		Adjustable 0 ÷ 60 s	
Integrated Bluetooth	Yes		Yes	
Operating temperature	-20°C + 50°C		-20°C + 50°C	
No. of door panels	**1 PANEL**	**2 PANELS**	**1 PANEL**	**2 PANELS**
Maximum capacity	160 Kg	80 + 80 Kg	160 kg	125 + 125 kg
Size of opening	800 ÷ 3000 mm	1000 ÷ 3200 mm	800 ÷ 3000 mm	1000 ÷ 3200 mm

K160

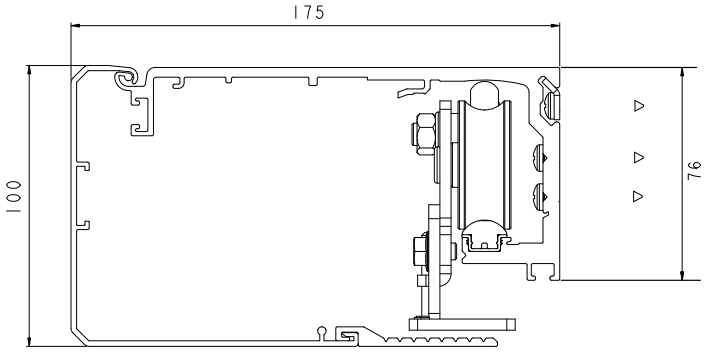

K250

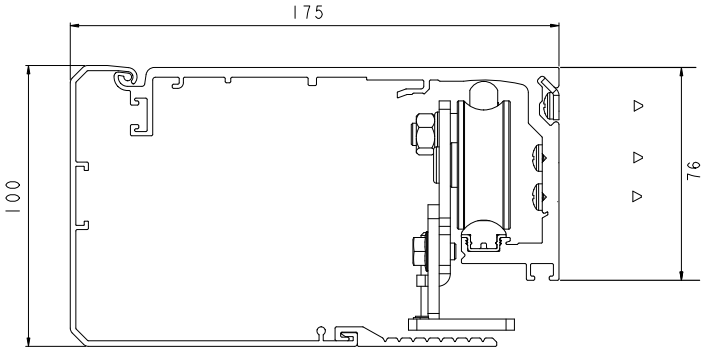

Pedestrian sliding door automations

K300 K600

Max. capacity 300 Kg

Max. capacity 600 Kg (only double panel)

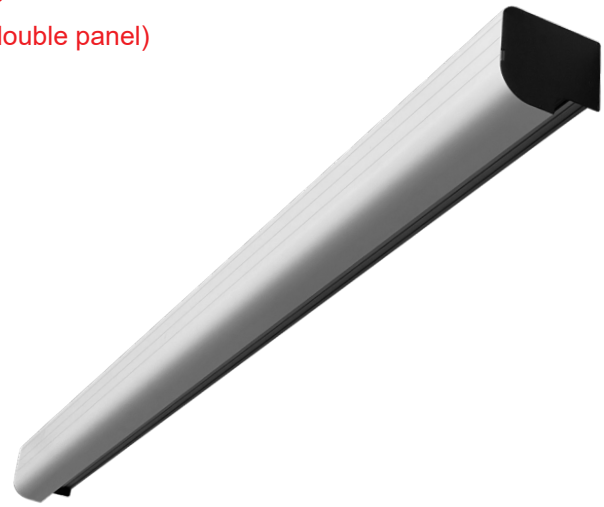

PRODUCT DESCRIPTION

TOPP door automations, models K300 and K600, for pedestrian sliding doors, max. load 300 kg (K300), 600 kg (K600), intensive duty devices, with electronic board with microprocessor of latest generation that allows the motion selfadjustment according to the weight and dimensions of the panels.
Built-in safety functions with thrust force control and obstruction detection system that automatically reverses the operation when an obstacle in the doorway is detected. Motor with encoder for the automatic reading of stroke, position and slowdown of the panels. Parameter setting on the electronic board and advanced setting for user and installer via smartphone, thanks to the Bluetooth device included into the electronic board. Selection of operating modes via manual selector, key selector or wireless via smartphone, by downloading the ToppGo App.
Tested in compliance with the EN16005. CE certified

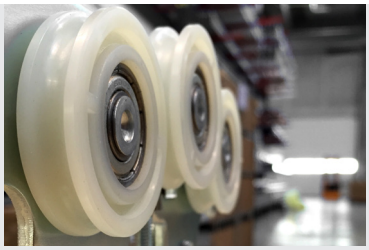

High quality materials and innovative technical solutions combined in a strong and high performing door opener.

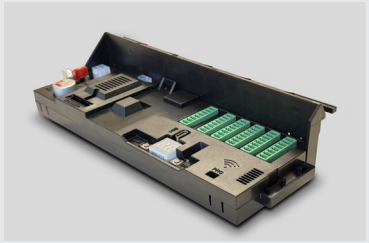

Electronic board with microprocessor, in compliance with the EN16005 standard, providing direct basic programming via buttons or advanced programming via digital selector.

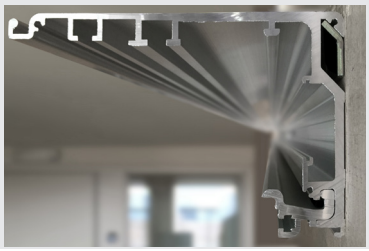

Easy installation due to the hook system for the pre-assembly of the transom to the wall.



TECHNICAL SPECIFICATIONS

	K300		K600
Power supply	230V ~ 50/60 Hz		230V ~ 50/60 Hz
Peripheral power output	24V - 500mA max		24V - 500mA max
Absorption	0,65 A		1.30 A
Max. power	150 W		300 W
Standby power	0,5 W		1 A
Durability	2.000.000 cycles		2.000.000 cycles
Type of use	Intensive		Intensive
Opening/closing speed	Adjustable 100 ÷ 800 mm/s		Adjustable 100 ÷ 800 mm/s
Opening/closing approacing speed	Adjustable 1 ÷ 50 mm/s		Adjustable 1 ÷ 50 mm/s
Automatic closing time	Adjustable 0 ÷ 60 s		Adjustable 0 ÷ 60 s
Integrated Bluetooth	Yes		Yes
Operating temperature	-20°C + 50°C		-20°C + 50°C
No. of door panels	**1 PANEL**	**2 PANELS**	**2 PANELS**
Maximum capacity	300 kg	150 + 150 kg	300 + 300 kg
Size of opening	800 ÷ 3200 mm	1000 ÷ 3200 mm	1000 ÷ 3200 mm

K300

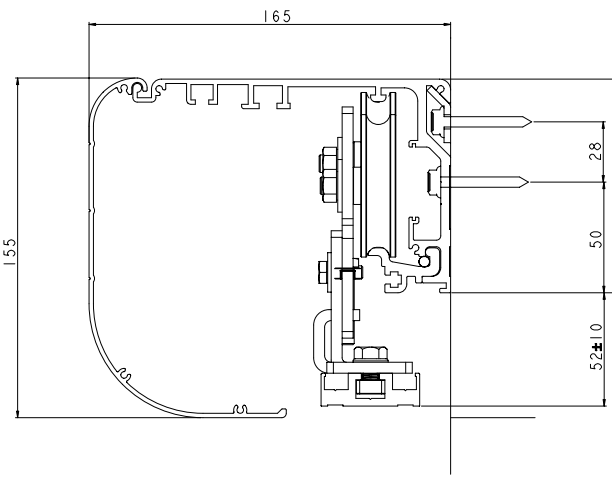

K600

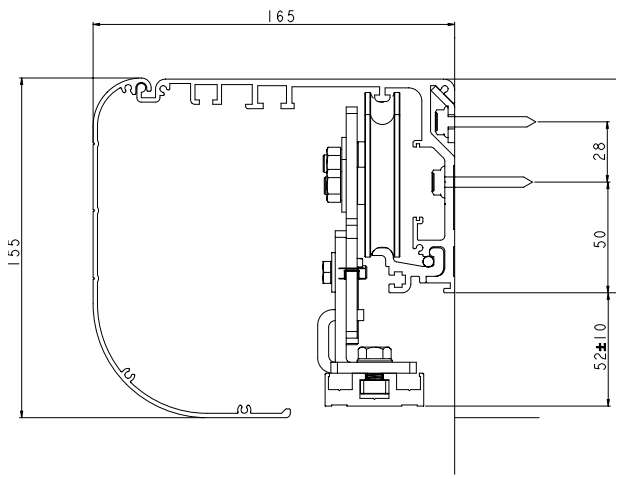

Redundant pedestrian sliding door automations

K200R

Max. capacity 200 Kg



PRODUCT DESCRIPTION

TOPP door automations, model K200R, for redundant pedestrian sliding doors, max. load 200 kg, intensive duty devices, with redundant electronic board with microprocessor of latest generation that allows the motion selfadjustment according to the weight and dimensions of the panels.
Built-in safety functions with thrust force control and obstruction detection system that automatically reverses the operation when an obstacle in the doorway is detected. Double motor with encoder for the automatic reading of stroke, position and slowdown of the panels. Basic parameter setting on the electronic board and advanced setting for user and installer via smartphone, thanks to the optional Bluetooth module GoOne. Selection of operating modes via manual selector or key selector. TOPP redundant automatic door systems are used for escape and emergency route solutions as an alternative to the S10 break-out system that provides a manual emergency opening.
Tested in compliance with the EN16005. CE certified.



High quality materials and innovative technical solutions combined in a compact and small door opener.

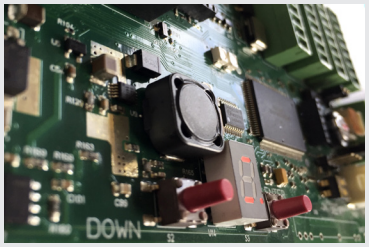

Double motor and double electronic board with safety system for the control of the movement during emergency opening on the escape route.



Alternative solution to break-out panic exit systems. Can be used as well on escape routes with full glass doors.



CARATTERISTICHE TECNICHE

	K200R	
Power supply	230V ~ 50/60 Hz	
Peripheral power output	24V - 500mA max	
Absorption	0,86 A	
Absorbed power	200 W	
Durability	2.000.000 cycles	
Type of use	intensive	
Opening/closing speed	adjustable 100 ÷ 800 mm/s	
Opening/closing approaching speed	adjustable 1 ÷ 50	
Opening/closing acceleration	adjustable 1 ÷ 12	
Automatic closing time	adjustable 0 ÷ 60 s	
No. of door panels	**1 PANEL**	**2 PANELS**
Maximum capacity	140 kg	100 + 100 kg
Size of opening	800 ÷ 1900 mm	1000 ÷ 2800 mm

K200R

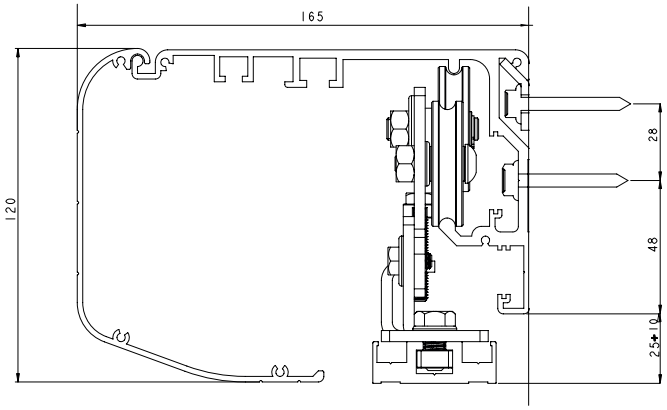

Telescopic pedestrian sliding door automations

K200T K280T K280TR

Max. capacity 200 Kg Max. capacity 280 Kg

PRODUCT DESCRIPTION

TOPP door automations, models K200T and K280T, for telescopic pedestrian sliding doors, max. load 200 kg (K200T), 280 kg (K280T), intensive duty devices, with electronic board with microprocessor of latest generation that allows the motion selfadjustment according to the weight and dimensions of the panels.
Built-in safety functions with thrust force control and obstruction detection system that automatically reverses the operation when an obstacle in the doorway is detected. Motor with encoder for the automatic reading of stroke, position and slowdown of the panels. Basic parameter setting on the electronic board and advanced setting for user and installer via smartphone, thanks to the optional-Bluetooth module GoOne. Selection of operating modes via manual selector, key selector or wireless via smartphone with GoOne module, by downloading the ToppGo App. Tested in compliance with the EN16005. CE certified.





High quality materials and innovative technical solutions combined in a compact and small door opener.

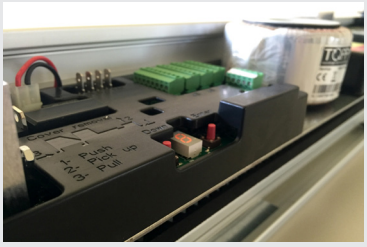

Electronic board with microprocessor, in compliance with the EN16005 standard, providing direct basic programming via buttons or advanced programming via digital selector.

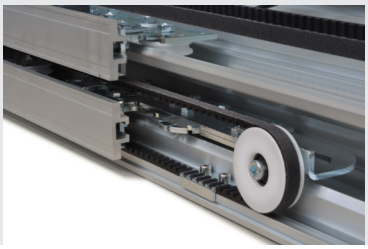

Top solidity, reliability and resistance due to high quality materials, resulting in the capacity to withstand any stress and strain.



TECHNICAL SPECIFICATIONS

	K200T		K280T - K280TR	
Power supply	230V ~ 50/60 Hz		230V ~ 50/60 Hz	
Peripheral power output:	24V - 500mA max		24V - 500mA max	
Absorption	0,32 A		0,41 A	
Absorbed power	70W		90W	
Durability	1.000.000 cycles		2.000.000 cycles	
Type of use	semi-intensive		intensive	
Opening/closing speed	adjustable 100 ÷ 800 mm/s		adjustable 100 ÷ 800 mm/s	
Opening/closing approaching speed	adjustable 1 ÷ 50		adjustable 1 ÷ 50	
Opening/closing acceleration	adjustable 1 ÷ 12		adjustable 1 ÷ 12	
Automatic closing time	adjustable 0 ÷ 60 s		adjustable 0 ÷ 60 s	
No. of door panels	**2 PANELS**	**4 PANELS**	**2 PANELS**	**4 PANELS**
Maximum capacity	2 x 100 kg	4 x 50 kg	2 x 140 kg	4 x 70 kg
Size of opening	900 ÷ 4200 mm	1800 ÷ 4200 mm	900 ÷ 4200 mm	1800 ÷ 4200 mm

K200T

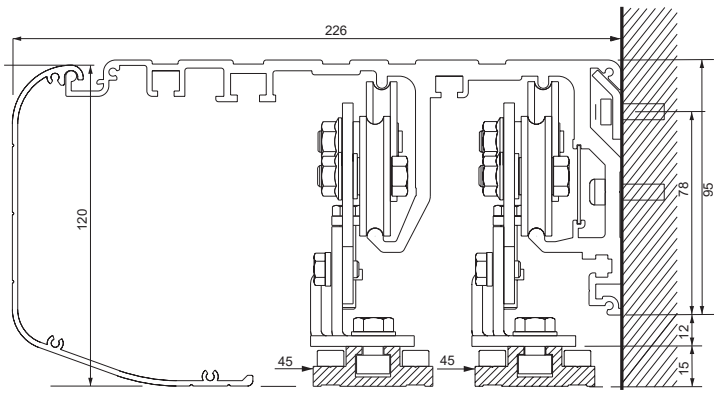

K280T - K280TR

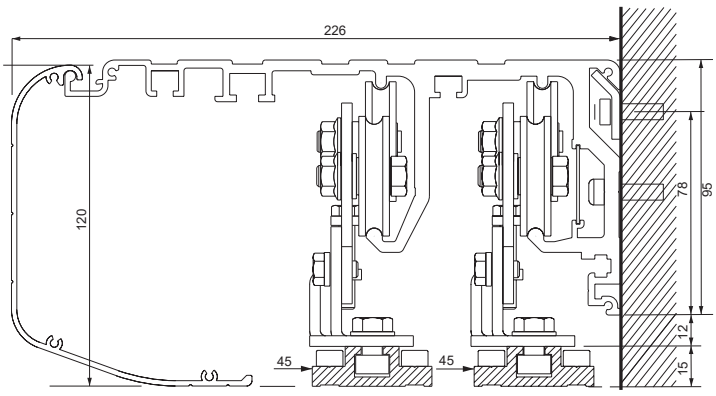



INSTALLATION TYPES – AUTOMATION FOR LINEAR SLIDING DOORS

2 Panels

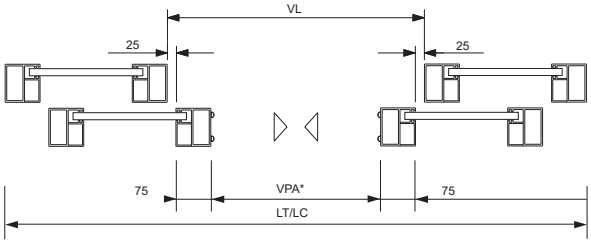

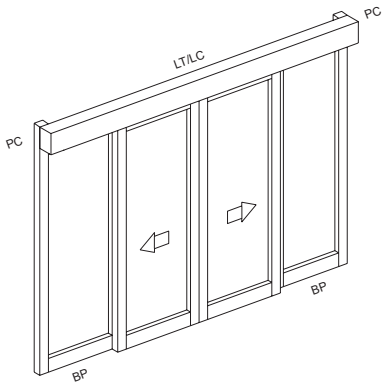

1 Panel opening to the right

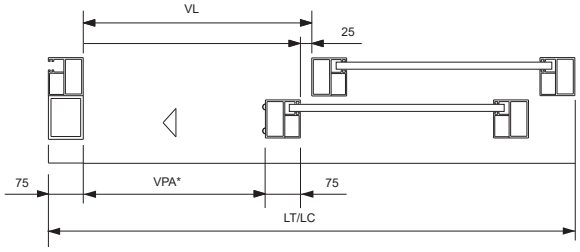

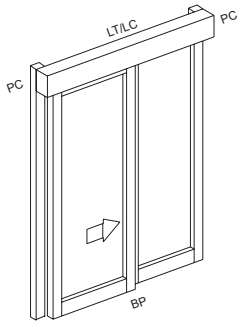

1 Panel opening to the left

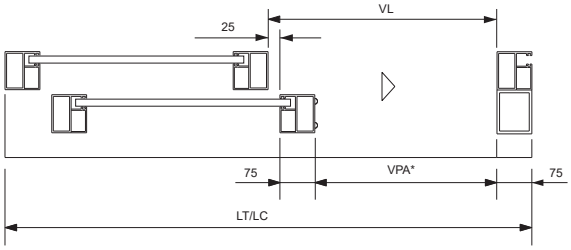

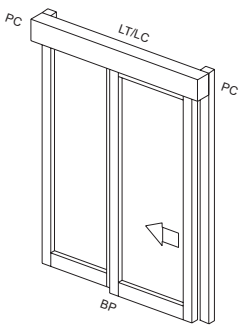

Two types of automatic door are available: Door automation with 2 panels which allows a pair of panels to slide simultaneously in the opposite direction; door automation with 1 panel which allows a single panel to slide in one direction.

VPA = net clear passage width - VL = gross clear opening width - LT/LC = door length/ mechanism box length - BP = rail + runner on floor - PC =electric wire fairlead.



INSTALLATION TYPES – AUTOMATION FOR TELESCOPIC SLIDING DOORS

4 Panels telescopic door automation

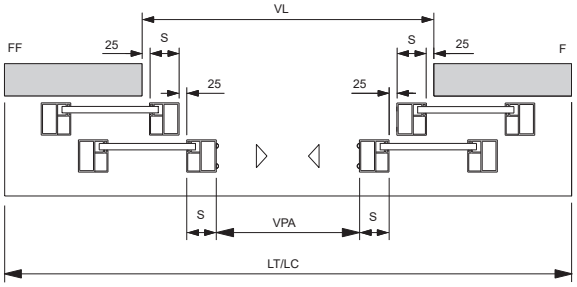

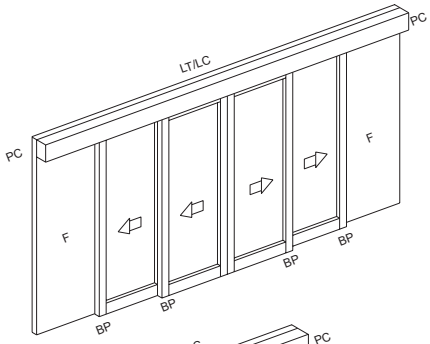

2 Panels telescopic door automation opening to the right

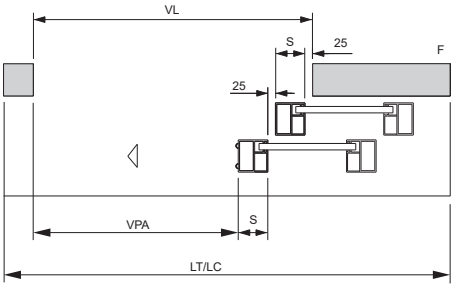

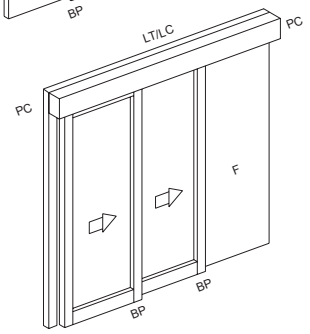

2 Panels telescopic door automation opening to the left

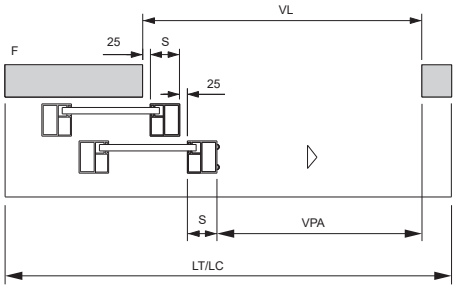

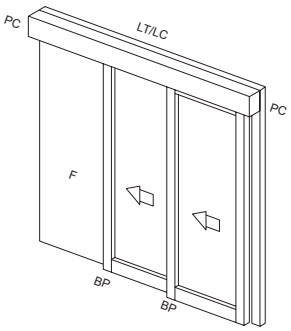

Note: When ordering a 1-panel door automation, always indicate the panel opening direction by referring to the automation front view.

Note: To comply with the safety regulations, the net clear passage width (VPA) must be less than the gross clear passage width (VL). The net clear passage width (VPA) is equal to the gross clear passage width (VL) when the doorpost shows no blunt and/or protrusion that may cause the shearing effect.

F=fix panel - S=profile thickness - VPA=net clear passage width - VL=gross clear opening width - LT/LC=door length/ mechanism box length - BP=rail + runner on floor - PC=electric wire fairlead.

AUTOMATION FOR SLIDING DOORS K LINE

ASSEMBLED DOOR OPERATORS

Automation + main beam with cover + emergency battery + on-board Bluetooth + carriages

K160

Max load:
160 kg 1 panel
80 kg + 80 kg 2 panels

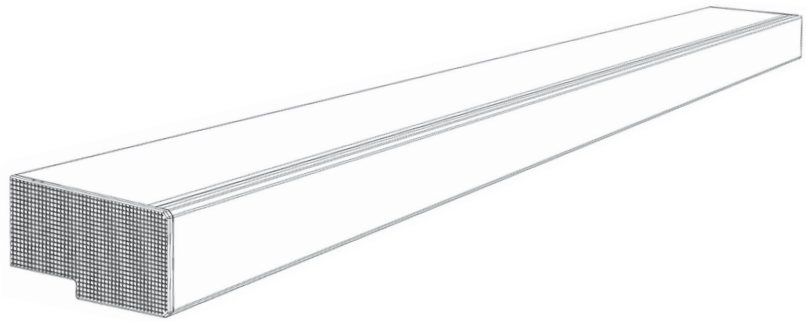

K250

Max load:
160 kg 1 panel
125 kg + 125 kg 2 panels

K300

Max load:
300 kg 1 panel
150 kg + 150 kg 2 panels

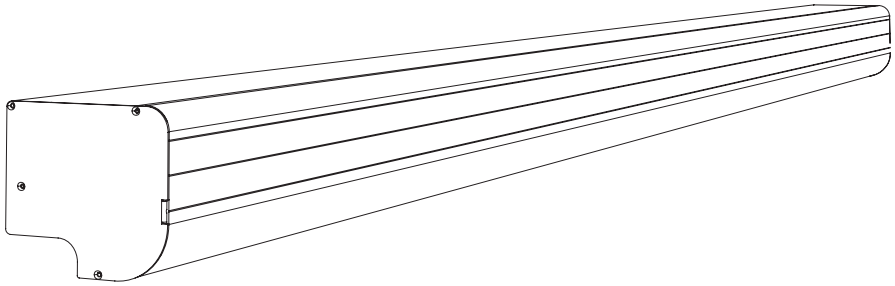

K600

Max load:
300 kg + 300 kg 2 panels

Note: Electronic board with onboard Bluetooth and possibility to control through Smartphone via ToppGo app (as an alternative to MS3 and KS3 selectors).

PLUG&PLAY DOOR OPERATORS

Automation + main beam with cover + emergency battery + Plug&Play power + 2 Plug&Play IS2 sensors + on-board Bluetooth + carriages

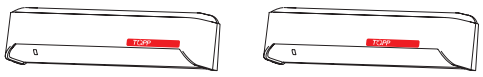

K160 PLUG & PLAY

Max load:
160 kg 1 panel
80 kg + 80 kg 2 panels

K250 PLUG & PLAY

Max load:
160 kg 1 panel
125 kg + 125 kg 2 panels

K300 PLUG & PLAY

Max load:
300 kg 1 panel
150 kg + 150 kg 2 panels

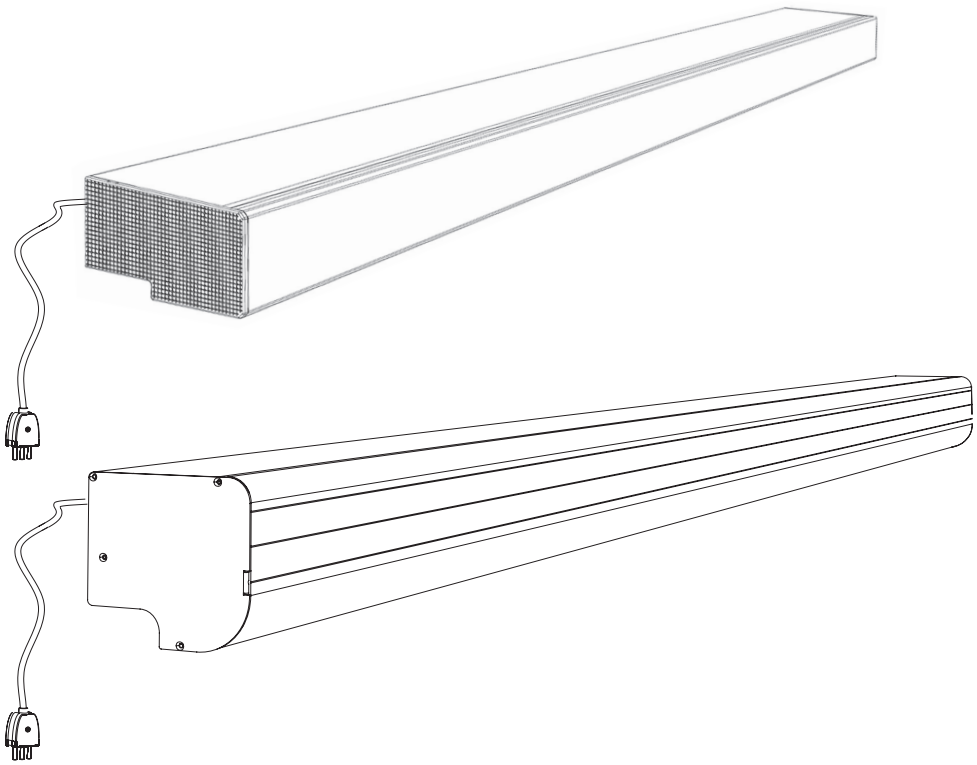

PANEL ADAPTER KITS FOR LINEAR SLIDING DOOR OPERATORS

T10 - for framed panels

Adapter kit includes:
Adapter
Track
Floor guide
Accessories

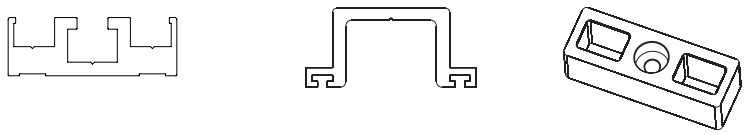

A10/A12- for glass panels

Adapter kit includes:
Adapter for 10/12mm glass panels
Floor guide
End-caps
Accessories

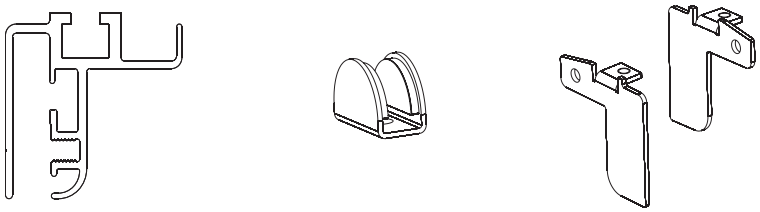

S10 - for panels with break-out

Adapter kit includes:
Adapter
Track
Runner on floor
Simple break-out system
Accessories

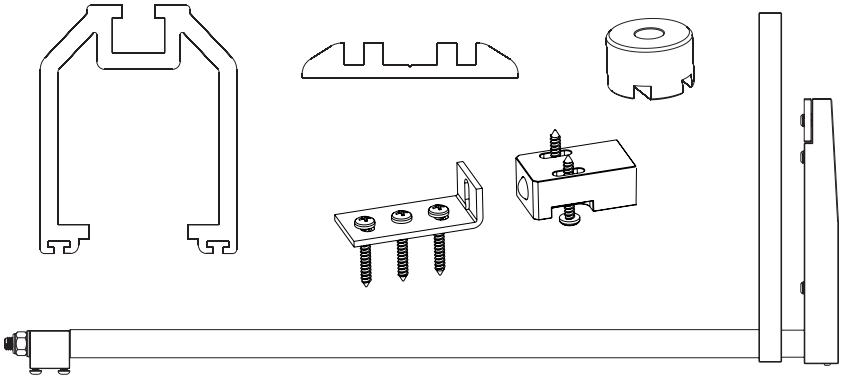

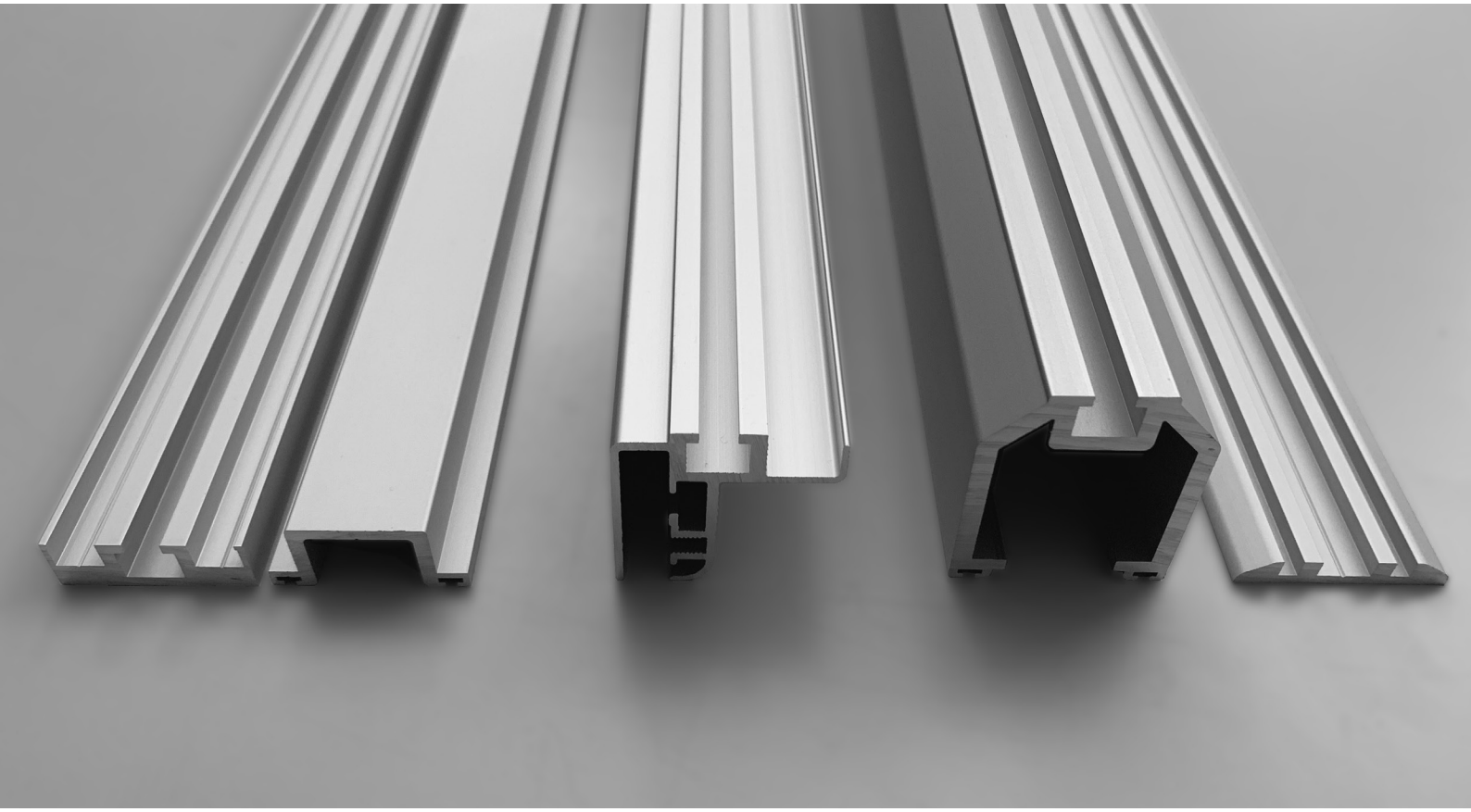

AUTOMATION FOR REDUNDANT SLIDING DOORS K

ASSEMBLED DOOR OPERATORS

Redundant automation + main beam with cover + emergency battery + carriages

K200R

Max load:
140 kg 1 panel
100 kg + 100 kg 2 panels

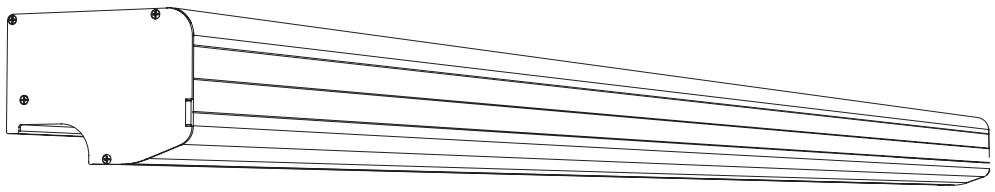

PLUG&PLAY DOOR OPERATORS

Redundant automation + main beam with cover + emergency battery + Plug&Play power + 1 Plug&Play WS3 sensor + 1 Plug&Play WS4 sensor + KS2R selector with key + carriages

K200R PLUG & PLAY

Max load:
140 kg 1 panel
100 kg + 100 kg 2 panels

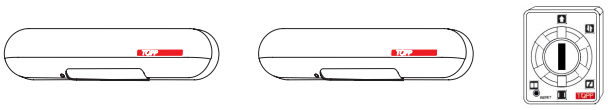

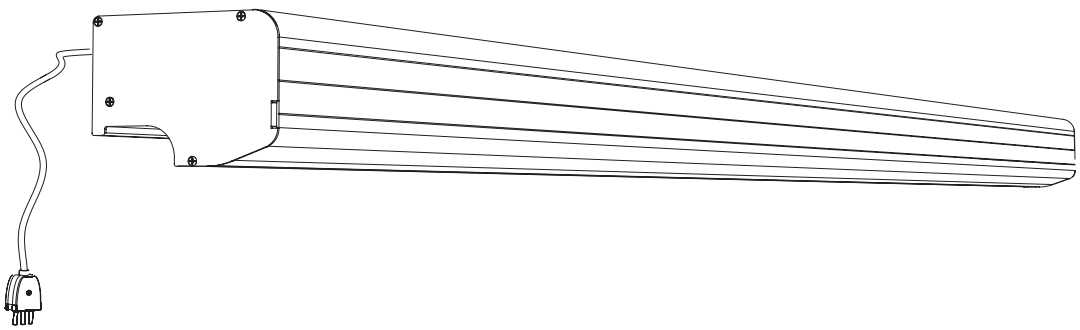


AUTOMATIC
DOORS
KEEP CLEAR
Vhi
AUTOMATIC
DOORS
KEEP CLEAR
AUTOMATIC
DOORS
The
Hyde

AUTOMATION FOR TELESCOPIC SLIDING DOORS K200T - K280T - K280TR

ASSEMBLED DOOR OPERATORS

Automation + main beam with cover + emergency battery + on-board receiver + carriages

K200T

Max load:
100 kg +100 kg 2 panels
50 kg + 50 kg + 50 kg + 50 kg 4 panels

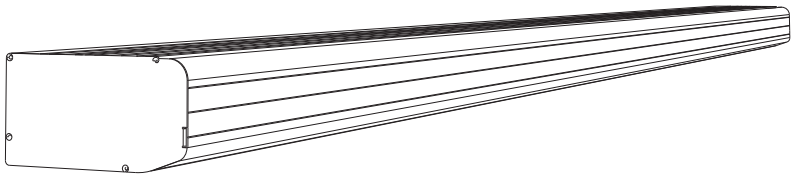

K280T

Max load:
140 kg+140 kg 2 panels
70 kg + 70 kg + 70 kg + 70 kg 4 panels

Special cover for glass door
(max. 3m length)

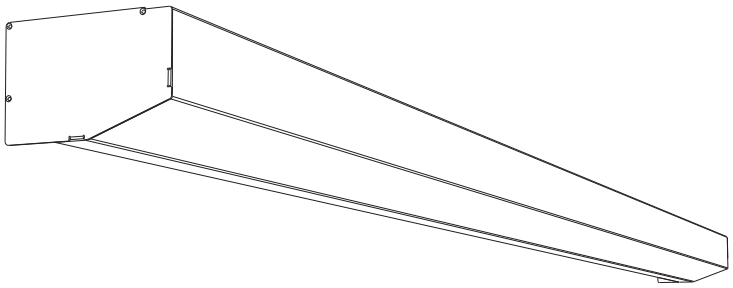

Note: Redundant version **K280TR** available on request (max. capacity 100+100 kg 2 panels, 50+50+50+50 kg 4 panels).VPA max 2 panels 1900mm, VPA max 4 panels 3800mm.

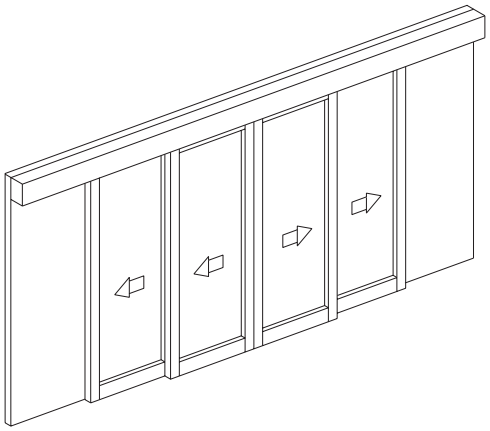

PANEL ADAPTER KITS FOR TELESCOPIC AUTOMATIONS K200T - K280T - K280TR

T10 - for framed panels

Adapter kit includes:
Adapter
Runner on floor
Accessories

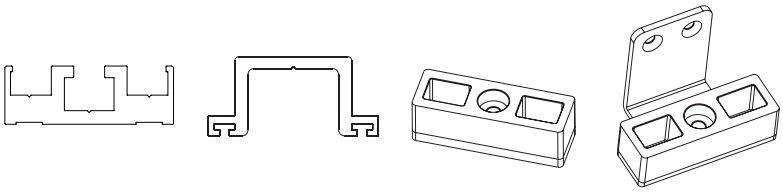

G60 - for glass panels

Adapter kit includes:
Clamp adapter for 10/12mm glass panels
Guide for fast panel
Floor guide for slow panel
Accessories

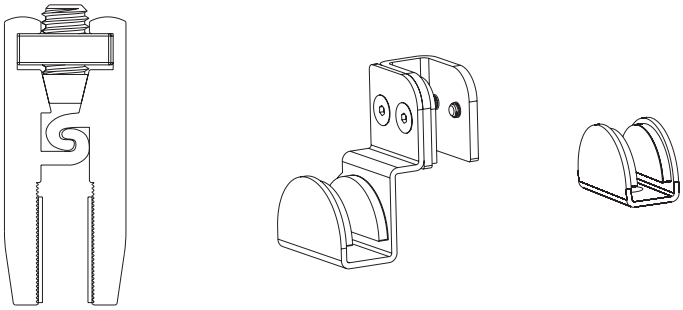

S10 - for panels with break-out

Adapter kit includes:
Adapter
Track
Runner on floor
Full break-out system
Accessories

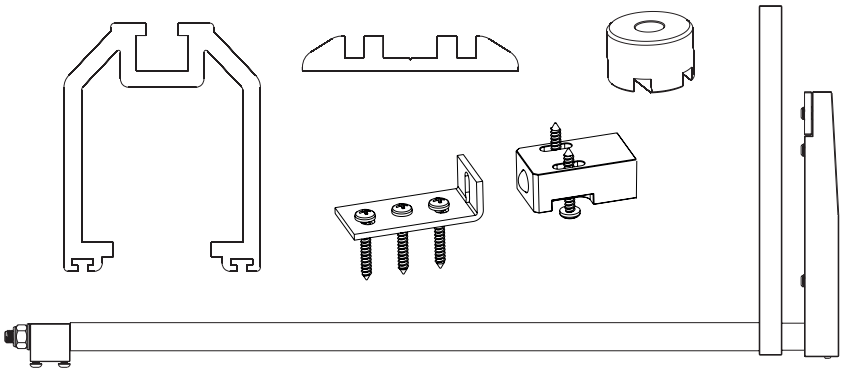

S10 break-out kit - profiles section and capacity

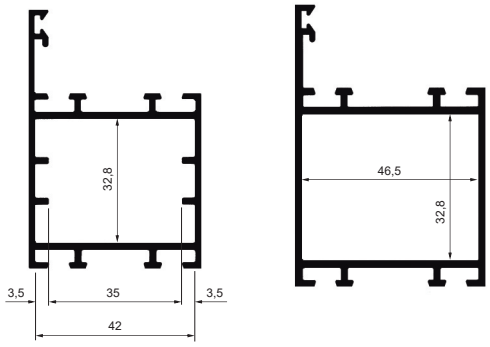

profile's minimum internal dimensions for the break-out kit installation

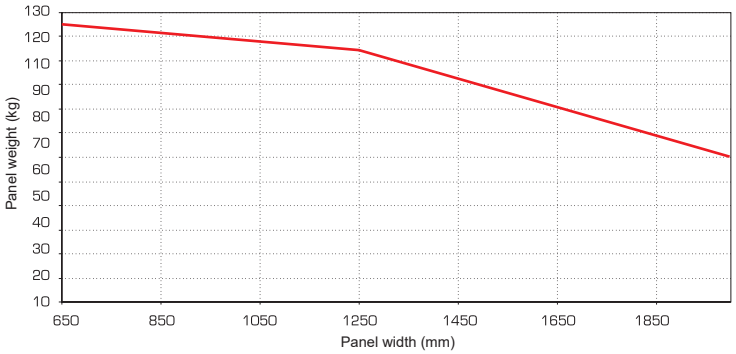

Note: The mechanical break-out anti-panic system can be used with panels that are max 2000 mm wide and that weigh max 70 kg each (for narrower panels, please refer to the relevant diagrams).
Note: The break-out kit weight (15 kg) needs to be added to the total panel weight.
Note: The images of the shown profiles are indicative only for the analysis of space for the assembly of the TOPP break-out system.

Assembly kits for sliding door automations

K160 K250 K300 K600

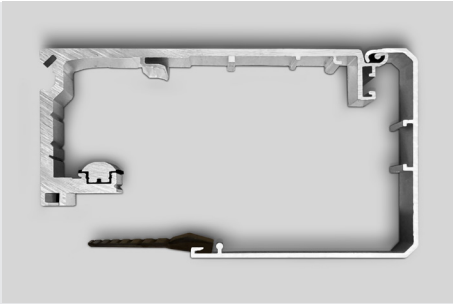

Aluminium profiles KIT

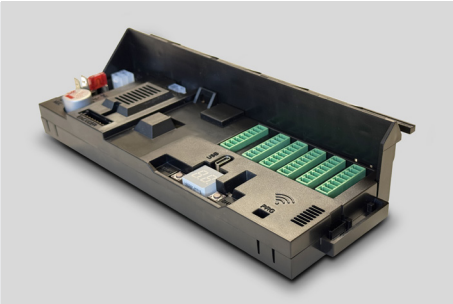

Motor & electronics KIT

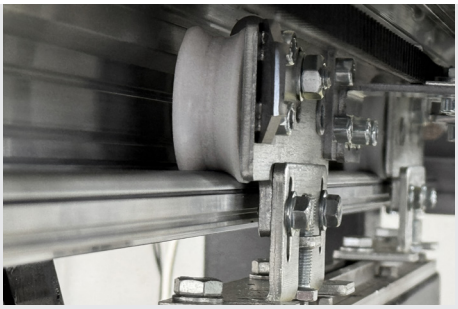

Carriages KIT

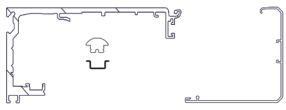	3P8101 3P8102 3P8103	K160 - K250 Profiles Kit - Silver L= 3100 K160 - K250 Profiles Kit - Silver L= 4400 K160 - K250 Profiles Kit - Silver L= 6500 Includes: main beam, track profile, track gasket, fairlead, mechanism cover, spare parts.
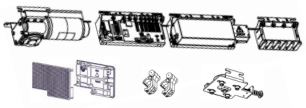	3P1530	K160 Motor & electronics Kit Includes: motor with encoder, electronic control board with Bluetooth, power suply module, battery, pulley, safety door limit stop switches, side end-caps, spare parts.
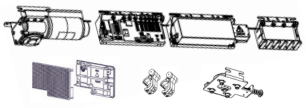	3P8030	K250 Motor & electronics Kit Includes: motor with encoder, electronic control board with Bluetooth, power suply module, battery, pulley, safety door limit stop switches, side end-caps, spare parts.
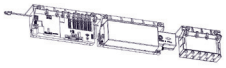	3P8050	K250 Retrofit Kit (compatibile with K200, K280 and DUEVILLE) Includes: electronic control board with Bluetooth, power suply module, battery, encoder wire, motor wire, spare parts.
	3P8170	K160 -K250 Carriages Kit Includes: carriages; belt fixing brackets (for 1 panel)
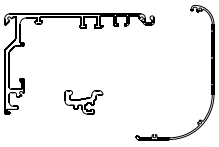	3P2004 3P2005 3P2006	K300 – K600 Profiles Kit - Silver L=3100 K300 – K600 Profiles Kit - Silver L=4400 K300 – K600 Profiles Kit - Silver L=6500 Includes: main beam, mechanism cover, felt pads, fairlead, spare parts.
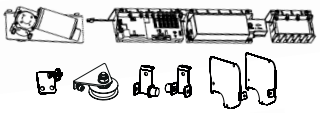	3P2530	K300 Motor & electronics Kit Includes: motor with encoder, electronic control board with Bluetooth, power suply module, battery, pulley, safety door limit stop switches, side end-caps, spare parts.
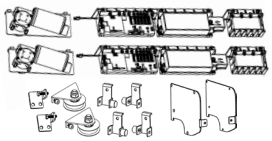	3P7031	K600 Motor & Electronics Kit (double panel only) Includes: 2 motors with encoder, 2 control boards with Bluetooth, 2 power suply modules, 2 battery, 2 pulleys, safety door limit stop switches, side end-caps, spare parts.
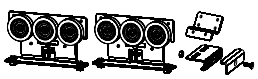	3P2070	K300 – K600 Carriages Kit Includes: carriages; belt fixing brackets (for 1 panel)
	0C3100 8E1181	Toothed transmission belt - 1 m Toothed transmission belt kit - 100 m
	8E3455 8E3456	K160 - K250 Cover opening gascket - 1 m K160 - K250 Cover opening gascket - 50 mi



Assembly kits for sliding door automations

K200T K280T



Aluminium profiles KIT

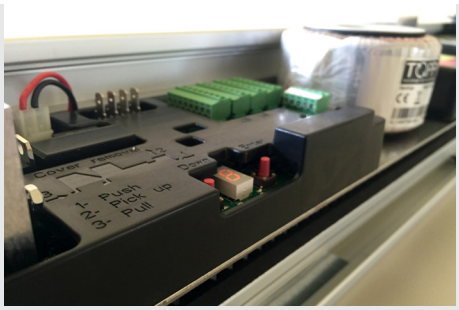

Motor & Electronics KIT

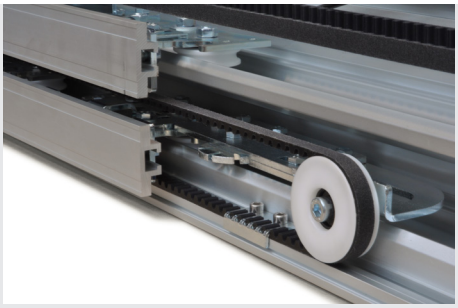

Carriages KIT

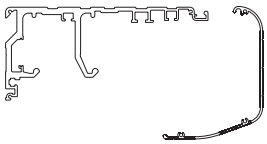

3T1004	K200T - K280T Profiles Kit - Silver L=3100
3T1005	K200T - K280T Profiles Kit - Silver L=4400
3T1006	K200T - K280T Profiles Kit - Silver L=6500
	Includes: main beam, mechanism cover, felt pads, fairlead, spare parts.

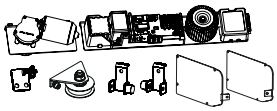

3T1035	K200T Motor & Electronics Kit Includes: motor with encoder, control board, transformer, battery, pulley, tension adjustment belt kit, safety door limit stop switches, silver side end-caps, onboard receiver for radio control selector, spare parts.

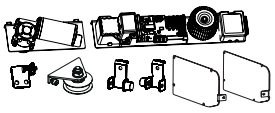

3T2035	K280T Motor & Electronics Kit Includes: motor with encoder, control board, transformer, battery, pulley, tension adjustment belt kit, safety door limit stop switches, silver side end-caps, onboard receiver for radio control selector, spare parts.

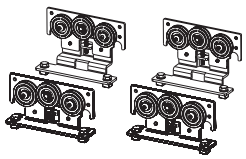

3T1070	Carriage kit and belt connection for 1 fast panel + 1 slow panel - 40-45 mm - right opening
3T1071	Carriage kit and belt connection for 1 fast panel + 1 slow panel - 40-45 mm - left opening
3T1072	Carriage kit and belt connection for 1 fast panel + 1 slow panel - 30-35 mm - right opening
3T1073	Carriage kit and belt connection for 1 fast panel + 1 slow panel - 30-35 mm - left opening
3T1074	Carriage kit and belt connection for 1 fast panel + 1 slow panel - 20-25 mm - right opening
3T1075	Carriage kit and belt connection for 1 fast panel + 1 slow panel - 20-25 mm - left opening



0C3100	Toothed transmission belt - 1 m
8E1181	Toothed transmission belt kit - 100 m

Accessories for automation assembly kits

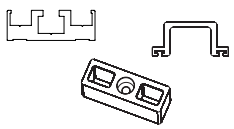

3Q1004	T10 Adapter and track kit - Silver L=2100
3Q1005	T10 Adapter and track kit - Silver L=3200
3Q1006	T10 Adapter and track kit - Silver L=6500
	Adapter + track for framed panel
3Q1030	T10 Floor guide kit for framed panel (for 1 panel)

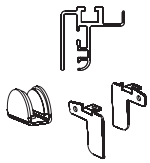

3Q2004	A10 Glass door adapter kit Silver L= 2100
3Q2005	A10 Glass door adapter kit Silver L= 3200
3Q2006	A10 Glass door adapter kit Silver L= 6500
	Adapter kit for glass panels (glass 10-10,40mm)
3Q2030	A10 Floor guide kit for glass panel
	Floor guide + end caps + components (for 1 panel)

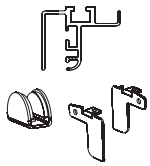

3Q2104	A12 Glass door adapter kit Silver L=2100
3Q2105	A12 Glass door adapter kit Silver L=3200
3Q2106	A12 Glass door adapter kit Silver L=6500
	Adapter kit for glass panels (glass 10,50-13,50mm)
3Q2130	A12 Floor guide kit for glass panel
	Floor guide + end caps + components (for 1 panel)

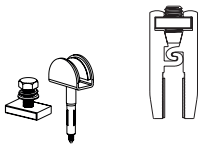

3Q5001	G60 Glass door adapter kit (glass 10 mm) L=1700
3Q5002	G60 Glass door adapter kit (glass 10 mm) L=3400
3Q5003	G60 Glass door adapter kit (glass 12 mm) L=1700
3Q5004	G60 Glass door adapter kit (glass 12 mm) L=3400
3Q5030	G60 Floor guide kit for glass panel (glass 10 mm)
3Q5031	G60 Floor guide kit for glass panel (glass 12 mm)
	Floor guide + carriage fixing blocks (for 1 panel)

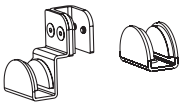

3Q5034	G60 Glass guide for double telescopic panel (glass 10mm) - right
3Q5035	G60 Glass guide for double telescopic panel (glass 12mm) - right
3Q5036	G60 Glass guide for double telescopic panel (glass 10mm) - left
3Q5037	G60 Glass guide for double telescopic panel (glass 12mm) - left
	Floor guide + carriage fixing blocks
	(for 1 slow panel + 1 fast panel)



3Q6003	G38 Glass door adapter kit (glass 10 mm) L=1500
3Q6004	G38 Glass door adapter kit (glass 10 mm) L=3000
3Q6005	G38 Glass door adapter kit (glass 12 mm) L=1500
3Q6006	G38 Glass door adapter kit (glass 12 mm) L=3000
	Adapter + screws for glass fixing + gaskets
	+ carriage fixing blocks

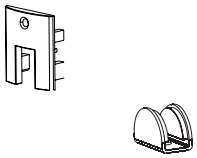

3Q6030	G38 End caps kit
	End caps + screws
	(for 1 panel)
3Q6031	G38 Floor guide kit for glass panel (glass 10 mm)
3Q6032	G38 Floor guide kit for glass panel (glass 12 mm)
	Floor guide (for 1 panel)

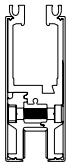

3Q7003	G82 / Z82 Glass door adapter kit (glass 10 mm) L=1500
3Q7004	G82 / Z82 Glass door adapter kit (glass 10 mm) L=3000
3Q7005	G82 / Z82 Glass door adapter kit (glass 12 mm) L=1500
3Q7006	G82 / Z82 Glass door adapter kit (glass 12 mm) L=3000
	Adapters + screws
	+ gaskets

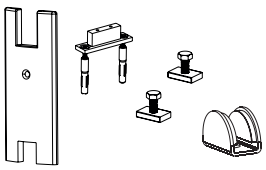

3Q7030	G82 End caps kit
	End caps + screws (for 1 panel)
3Q7031	G38/G82_Z82 Floor guide kit
	Floor guide + carriage fixing blocks (for 1 panel)
3Q7032	Kit G82 Floor guide kit for glass panel (glass 10 mm)
3Q7033	Kit G82 Floor guide kit for glass panel (glass 12 mm)
	Floor guide + carriage fixing blocks (for 1 panel)



8E1190	Jamb gasket for glass panels L=3000
8E1191	Diverting gasket 40mm for glass panel L=3000
8E1173	P18 Jamb gasket for 10mm glass panels with
	flat gasket L=3000

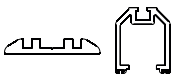

3Q3004	S10 Adapter and track kit - Silver L= 2100
3Q3005	S10 Adapter and track kit - Silver L= 3200
3Q3006	S10 Adapter and track kit - Silver L= 6500
	Adapter + track for break-out system

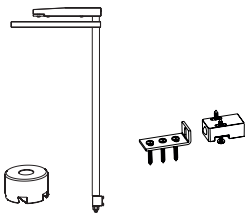

3Q8050	S10 Simple break-out system kit for P45 and R40 profiles
	Simple break-out system + sticker (for 1 active panel)
3Q8052	S10 Full break-out system kit for telescopic doors for P45 and R40
	profiles - Full break-out system + sticker (for 2 active panels)
3Q3030	S10 Simple break-out system kit for R50 profiles
	Simple break-out system + sticker (for 1 active panel)
3Q3032	S10 Full break-out system kit for telescopic doors for R50 profiles
	Full break-out system + sticker (for 2 active panels)
3Q3040	S10 Full break-out system kit
	Full break-out system (for 1 semi-fixed panel)

ACCESSORIES

	8E1011	IS1 Infrared active sensor - Black
	8E1013	IS1 Infrared active sensor - Silver
	8E1704	IS2 Activation and safety infrared sensor (in compliance with EN16005 and DIN 18650) - Black
	8E1705	IS2 Activation and safety infrared sensor (in compliance with EN16005 and DIN 18650) - Grey
	8E1713	IS5 Infrared sensor for lateral safety (in compliance with EN16005 and DIN 18650) - Black
	8E1714	IIS5 Infrared sensor for lateral safety (in compliance with EN16005 and DIN 18650) - Grey
	8E1075	WS2 microwave sensor for V1E and V1 - White
	8E1720	WS3 Dual technology, automatic door activation and safety sensor (in compliance with EN16005) – Black
	8E1721	WS3 Dual technology, automatic door activation and safety sensor (in compliance with EN16005) – Silver
	8E1722	WS4 Dual technology, activation and safety sensor for redundant automatic doors (in compliance with EN16005) - Black
	8E1718	WS7 Dual technology, automatic door activation and safety sensor – Black
	8E1724	WS5 microwave activation sensor – Black
	8E1725	WS6 microwave unidirectional activation sensor – Black
	8E1790	Universal rain protection cover for sensors
	8E1791	Device for concealed fitting for WS3-WS4 sensors
	8E1792	Bracket for roof fitting for IS2-WS3-WS4 sensors
	8E1793	Device for concealed fitting for IS2 sensors

ACCESSORIES

	8E1810 8E1812	MS2 Knob functions selector (DUEVILLE, K200T and K280T) MS3 Knob functions selector (K160, K250, K300 and K600)
	8E1880 8E1870	KS2 Key operated functions selector (DUEVILLE, K200T and K280T) KS3 Key operated functions selector (K160, K250, K300 and K600)
	8E1882	KS2R Analog functions selector key operated for redundant door automation
	8E1081	KC1 Key lock switch
	8E1086	KC1O Key lock switch for redundant sliding door automation (opening only)
	8E0420	Neutral key for KC1 e KC1O
	8C0477	SwitchBoxDC Wifi device for the door opening via smartphone or tablet
	8E1166	GO1 Bluetooth module for parameters setting and function selection via the ToppGO App

ACCESSORIES

	8E1091	PU1 Ultra-flat activation push pad
	8E0125	PU3 Push button “pull release”
	8E1096	PU4 Push button “Press to Open”
	8E1097	PU5 Mushroom head push button
	8E1150	HS1 Touchless activation switch
	8E1094	HS3 Touchless infrared switch
	8E1143	HS4T Touchless infrared switch wireless
	8E1141	HS4R receiver for HS4T
	8E1710	KT1 Electronic keypad
	8E1095	SA2 Proximity card and tag reader
	8E0483	TG1 ABS tag device with serial number
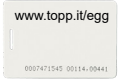	8E0482	TE1 Proximity card with serial number
	8E0304	TG2 2-channels mini rolling code transmitter 868 Mhz
	8E0661	RG2 Mini 1-channel receiver 12/24V 868 Mhz 500 codes

ACCESSORIES

	8E1069	FK1 Single range photocell kit with accessory kit for simple break-out system for K160 - K250
	8E1059	F1 Single range photocell kit with accessory kit for simple break-out system for K300 - K600
	3Q8071	MC1 Magnetic switch for full break-out system
	8E1131 8E1133 8E1134	EB20 Electric lock Kit for K160 - K250 (with manual release) EB20-FS "Fail Safe" electric lock Kit for K160 - K250 (with manual release) EB20-BS Bistabile electric lock Kit for K160 - K250 (with manual release)
	8E1132	Panel unlocking device for EB20 electric lock
	8E1167	Armored key box with release cable for manual unlock
	8E1123	Manual unlock release cable for armored key box
	8E1100	EB2 Electric lock Kit for K200T - K280T (with manual release)
	8E1101	EB3 Electric lock Kit for K300 and K600 (to be combined with knob unlocking device 8E1110)
	8E1110	Panel unlocking cable with knob for EB2 - EB3
	8E1106	EB4 Electric lock Kit for DUEVILLE (with manual release)
	8E1128	EB16 Bistable electric lock Kit K200R-K280TR (with manual release)
	8E1125	EB13 Fail Safe electric lock K300-K600-K200T-K280T

TOPPGO



Bluetooth solution for parameter settings and function selection via smartphone or tablet

ToppGO is an easy and intuitive solution, designed for TOPP automatic doors, for setting the parameters and selecting the functions through a free application to be installed in your mobile device.

The system consists of a Bluetooth module included on board the door drive and the ToppGO App. The ToppGO App can be easily downloaded to the mobile phone and is compatible with both Android and IOS devices.

It offers two different levels of password access, for the installer or the user.

The installer can view and program the different door parameters, check error history, and perform a preliminary diagnostic check. The user can choose the mode of operation between automatic, open, closed, entry only, exit only or partial opening. The system also allows the user to download the door data and send them to technical support to review and make any parameter changes. The technician then can either reload the modified parameters or load templates with predefined parameters depending on the type of door and installation.

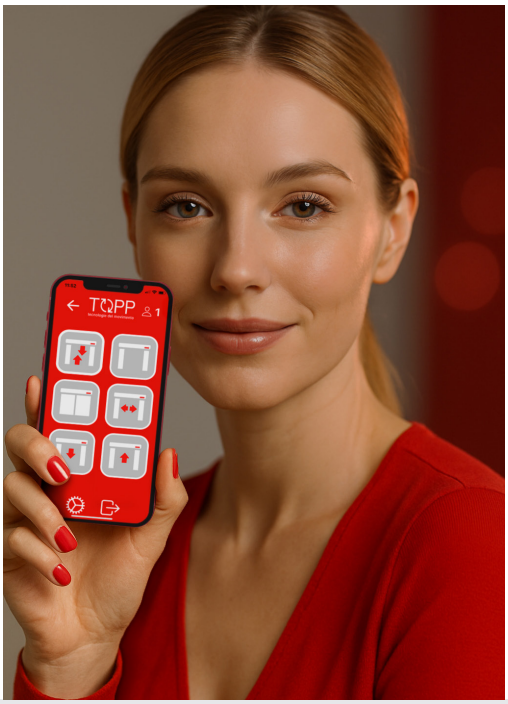



USER PROFILE

The smartphone becomes a selector where the user can choose the mode of operation of the door: in automatic, in open, in closed, in entry only, in exit only or with partial opening. The user can also download data to send it to technical support for error checking.



INSTALLER PROFILE

The installer can set and adjust all door parameters according to the needs of the installation. He can perform a preliminary diagnostic check, monitor error logs, download the existing parameters, modify and upload them back or, alternatively, upload predefined templates prepared for similar ports.

SPARE PARTS



8E3400	K160 - K250 Main beam L=3100
8E3401	K160 - K250 Main beam L=4400
8E3402	K160 - K250 Main beam L=6500



8E3410	K160 - K250 Wheel glide profile L=3100
8E3411	K160 - K250 Wheel glide profile L=4400
8E3412	K160 - K250 Wheel glide profile L=6500

8E3450	K160 - K250 Wheel glide profile gasket L=3100
8E3451	K160 - K250 Wheel glide profile gasket L=4400
8E3452	K160 - K250 Wheel glide profile gasket L=6500

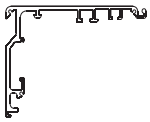

8E1316	K300 - K600 Main beam L=3100
8E1317	K300 - K600 Main beam L=4400
8E1318	K300 - K600 Main beam L=6500



8E1319	K300 - K600 Wheel glide profile L=3100
8E1320	K300 - K600 Wheel glide profile L=4400
8E1321	K300 - K600 Wheel glide profile L=6500

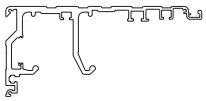

8E1325	Kit K200T - K280T Main beam L=3100
8E1327	Kit K200T - K280T Main beam L=6500

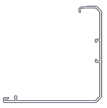

8E3420	K160 - K250 Mechanism cover L=3100 silver
8E3421	K160 - K250 Mechanism cover L=4400 silver
8E3422	K160 - K250 Mechanism cover L=6500 silver



8E1310	K300 - K600 Mechanism cover L=3100 silver
8E1311	K300 - K600 Mechanism cover L=4400 silver
8E1312	K300 - K600 Mechanism cover L=6500 silver



8E1300	K200T-K280T Mechanism cover L=3100 silver
8E1322	K200T-K280T (with G60 or 20÷25mm profiles) Mec. cover L=3000 silver
8E1323	K200T-K280T (with P35 or 30÷35mm profiles) Mec. cover L=3000 silver



8E3480	K160 - K250 Main beam fairlead kit

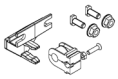

8E3483	K160 - K250 Cover hooking clip kit



8E3484	K160 - K250 Manual release kit for EB20 electric lock



8E1475	K300 - K600 Main beam fairlead kit

SPARE PARTS

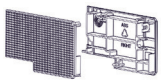	8E3490	K160 - K250 Grey end-caps kit (2pcs)
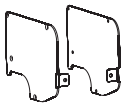	8E1384	K300 - K500 Black end-caps kit (2pcs)
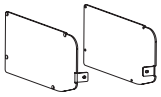	8E1388	K200T - K280T Silver end-caps set (2pcs)
	8E1510	K160 - K250 Carriage
	8E1501	K300 Carriage
	8E1500 8E1502	K200T - K280T Carriage kit for fast panel - 40÷45 profiles K200T - K280T Carriage kit for slow panel - 40÷45 profiles
 	8E1503 8E1504 8E1505 8E1506	K200T - K280T Carriage kit for fast panel - 30÷35 profiles K200T - K280T Carriage kit for slow panel - 30÷35 profiles K200T - K280T Carriage kit for fast panel - 20÷25 profiles K200T - K280T Carriage kit for slow panel - 20÷25 profiles
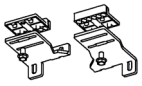	8E3482	K160 - K250 Belt/carriage transmission bracket
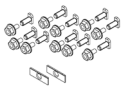	8E3481	K160 - K250 Main beam spare parts kit
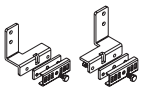	8E1478 8E1479	K200T - K280T Belt connector kit for 1 slow panel (right) K200T - K280T Belt connector kit for 1 slow panel (left)
	8E1480	K200T - K280T Belt connector to the main beam kit (for 1 slow panel)
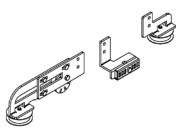	1T5300 1T5301 1T5302 1T5303	K200T - K280T Hanging kit right slow panel - 40 ÷ 45 profiles K200T - K280T Hanging kit left slow panel - 40 ÷ 45 profiles K200T - K280T Hanging kit right slow panel - 20 ÷ 25/30 ÷ 35 profiles K200T - K280T Hunging kit left slow panel - 20 ÷ 25/30 ÷ 35 profiles
	8E3575	K160 - K250 Belt transmission pulley
	8E3485	K160 - K250 Safety door stop limit kit (2pcs)

SPARE PARTS

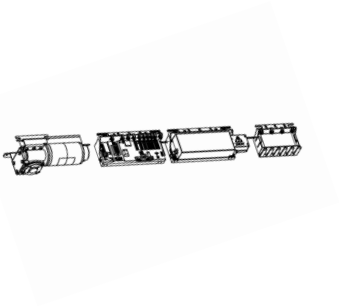

8E3530	K160 Motor & electronics unit
8E3531	K250 Motor & electronics unit
8E3532	K300 Motor & electronics unit
	Motor with encoder, control board with on-board Bluetooth, transformer, battery



8E3800	K200T Motor & electronics unit
8E3801	K280T Motor & electronics unit
	Motor with encoder, control board, transformer, battery



8E1615	K200R Motor & electronics unit 2 panels
8E1616	K200R Motor & electronics unit 1 panel
	Double motor with encoder, double control board, transformer, battery



8E3510	K160 Electronics unit
8E3511	K250 Electronics unit
8E3512	K300 Electronics unit
	Control board with on-board Bluetooth, transformer, battery

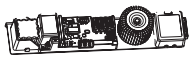

8E3850	K200T Electronics unit
8E3851	K280T Electronics unit
	Control board, transformer, battery



8E1660	K200R Electronics unit
	Double control board, transformer, battery

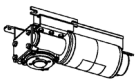

8E3501	K250 Motor with gearbox and encoder
8E3502	K300 Motor with gearbox and encoder

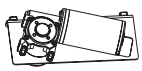

8E3820	K200T Motor with gearbox and encoder
8E3821	K280T Motor with gearbox and encoder

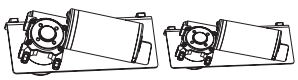

8E1665	K200R Master motor with gearbox and encoder
8E1666	K200R Slave motor with gearbox and encoder

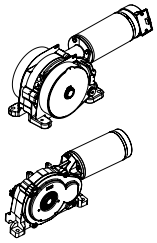

3S1800	Kit S200 Motor with gearbox, springs and encoder

3S1900	Kit M200 Motor with gearbox and encoder

SPARE PARTS

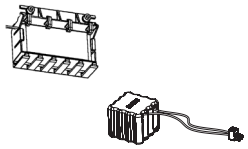

8E3580	K160 - K250 - K300 Back-up battery pack module 19,2V 600mA
8E1645	K200T - K280T Back-up battery pack 19,2V 600mA
8E1647	K200R Back-up battery pack 19,2V 2500mA
8E1648	S200 Back-up battery pack 19,2V 2500mA
8E3680	M200 Back-up battery pack19,2V 600mA

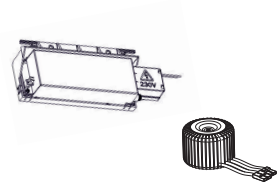

8E3570	K160 - K250 - K300 Power suply module
8E0224	K200T - K280T Toroidal transformer
8E0228	S200 Toroidal transformer
8E0231	M200 Toroidal transformer

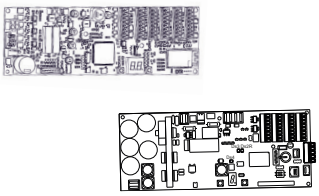

8E3540	K160 Electronic board with on-board Bluetooth
8E3541	K250 - K300 Electronic board with on-board Bluetooth
8E3650	K200T Electronic board
8E3651	K280T Electronic board
8E1637	K200R Master electronic board for redundant automation
8E1638	K200R Slave electronic board for redundant automation
3S1811	S200 Electronic board
3S1911	M200 Electronic board



8E1458	F1-F2 Photocells kit (without electronic board)
8E1459	Electronic board for F1-F2 photocells



E1365	T10 Adapter for framed panels L=2100 Silver
8E1369	T10 Adapter for framed panels L=3200 Silver
8E1361	T10 Adapter for framed panels L=6500 Silver



8E1366	T10 Track for framed panels L=2100 Silver
8E1370	T10 Track for framed panels L=3200 Silver
8E1362	T10 Track for framed panels L=6500 Silver



8E1294	S10 Adapter for break-out system L=2100 Silver
8E1286	S10 Adapter for break-out system L=3200 Silver
8E1290	S10 Adapter for break-out system L=6500 Silver



8E1295	S10 Track for break-out system L=2100 Silver
8E1287	S10 Track for break-out system L=3200 Silver
8E1291	S10 Track for break-out system L=6500 Silver



3Q1030	T10 Floor guide kit for framed panel

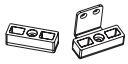

8E1373	K200T - K280T Floor guide kit for fast and slow framed panels



0B4507	Runner on floor for break-out system



8E1234	Lower pivot with spring for break-out door operator



1T6004	Floor guide kit for glass panels (1 panel)



1T6003	End caps kit with components for glass panels (1 panel)
1T6005	End caps kit with components for glass panels VPA>2000 (1 panel)



1T6075	K200T - K280T Floor guide kit for fast glass panel

F30

Profile for fixed glass panels for automatic sliding doors

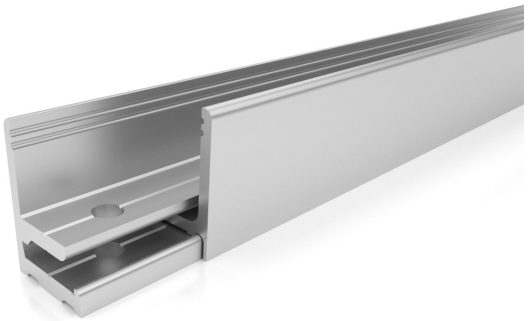

The profile is 21mm thick, the bottom and upper base is 30 mm high and the side profiles are 13mm wide.
It is supplied with gaskets and accessories to fit laminated 10,76mm glass or tempered 10mm, 12mm glasses.

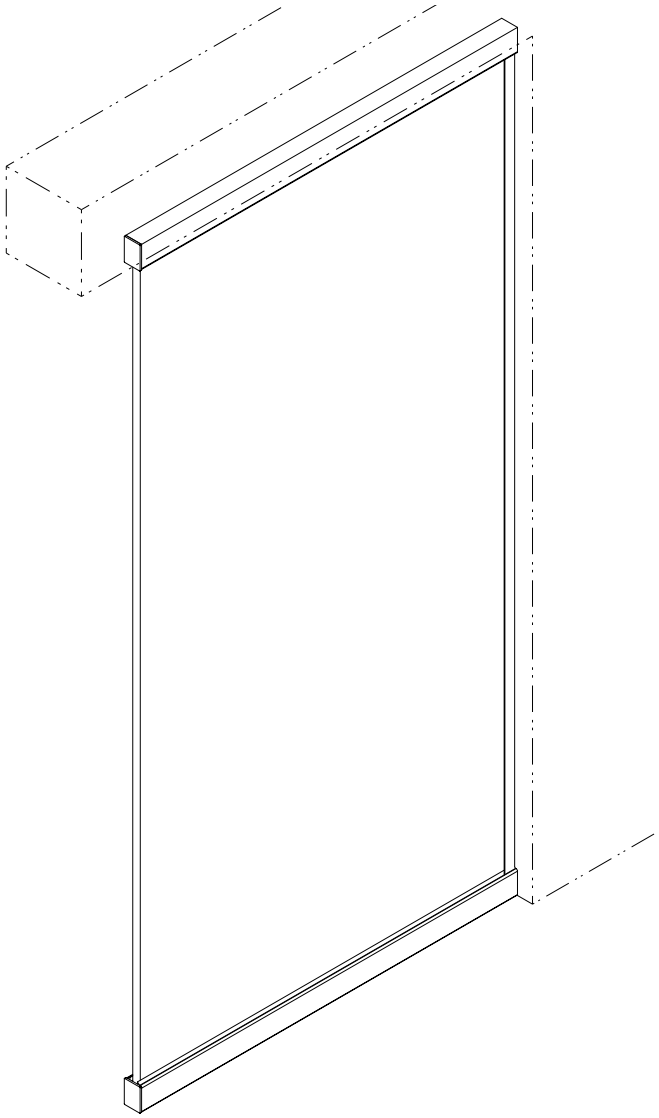

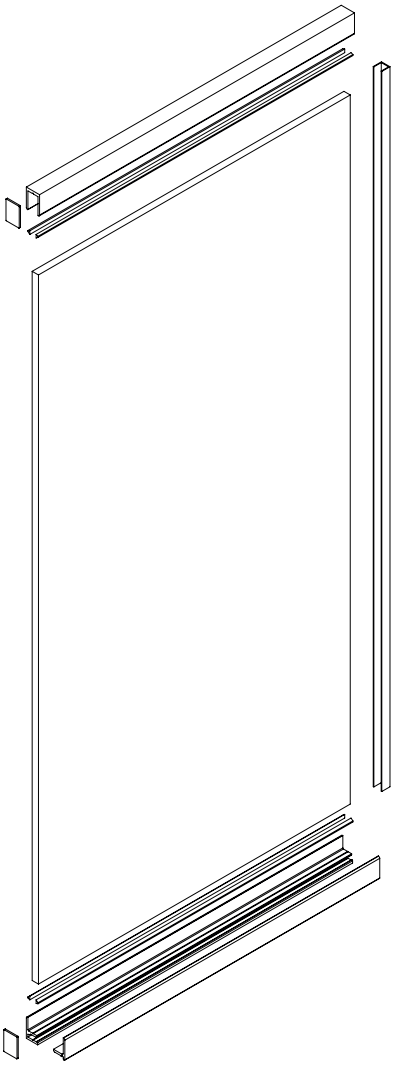

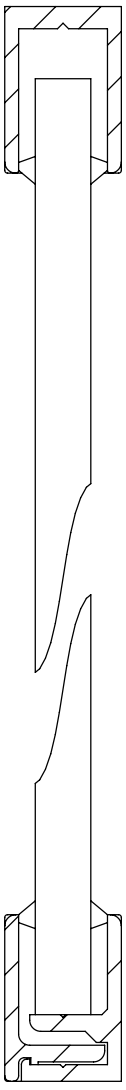

F30 PROFILE FOR FIXED GLASS PANELS FOR SLIDING AUTOMATIC DOORS

PANEL KIT

3Q8201	F30 Kit for 1 fixed panel L 1500 - H 3000 10,76 mm laminated glass	
3Q8202	F30 Kit for 1 fixed panel L 1500 - H 3000 10 mm temperd glass	
3Q8203	F30 Kit for 1 fixed panel L 1500 - H 3000 12 mm temperd glass	

8E2300	F30 Bottom clamp profile	L=3000

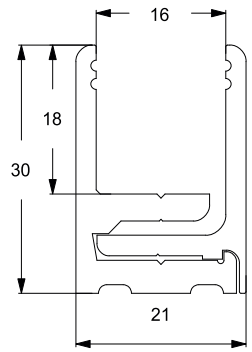

8E2301	F30 Top U profile	L=3000

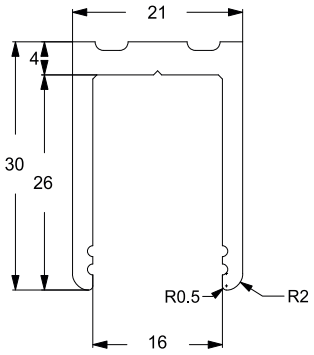

8E2302	F30 Vertical U profile	L=3000

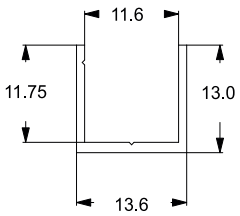

8E2320	F30 Gasket for 10 mm glass	L=1000
8E2321	F30 Gasket for 12 mm glass	L=1000
8E2340	F30 End cap	1 pc

P35 Profile for automatic sliding doors



The profile is 35mm thick, the bottom and upper base is 50mm high and the side profiles are 35mm wide.
It is supplied with gaskets and accessories to fit glasses from 8 to 28mm of thickness.

Single active panel without door stop

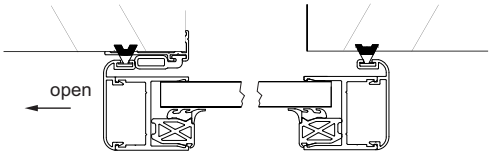

Single active panel with door stop

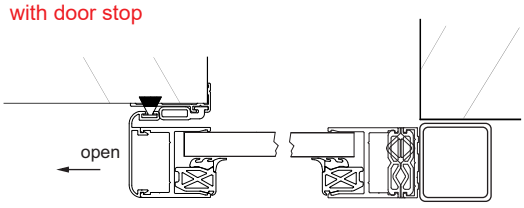

Single active + fixed panels without door stop

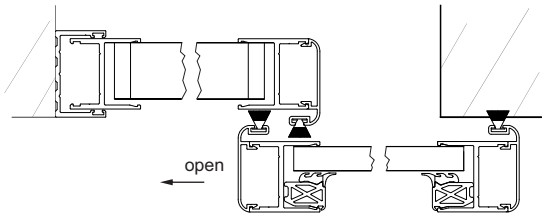

Single active + fixed panels with door stop

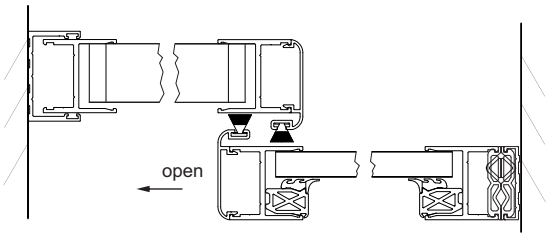

Double active panels

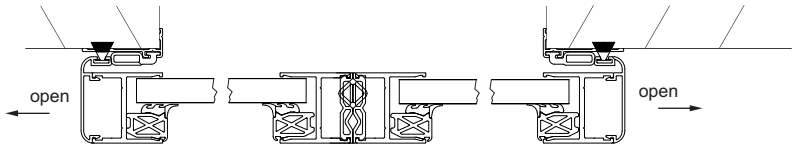

Double active + fixed panels

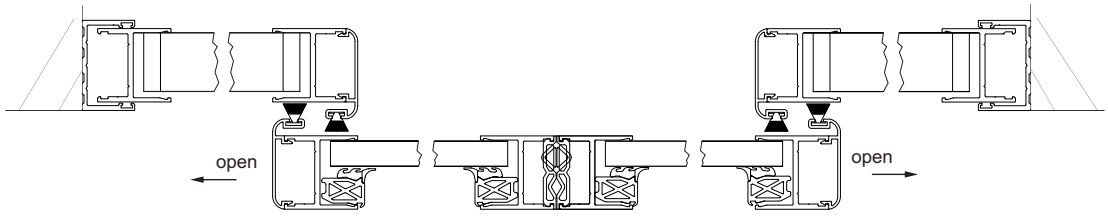

Fixed panel

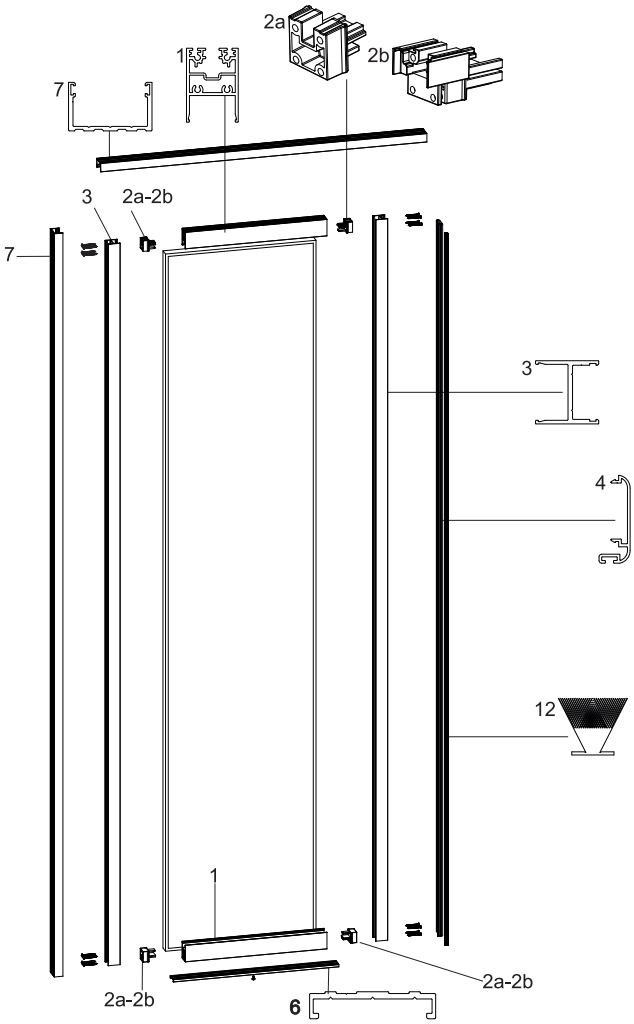

1. Horizontal profile
2a. Internal corner connection
2b. External visible corner connection
3. Vertical profile
4. Vertical brush holder profile
6. Fixed panel bottom holding profile
7. U-profile for fixed panel lateral and upper fixing
12. Brush

Active panel

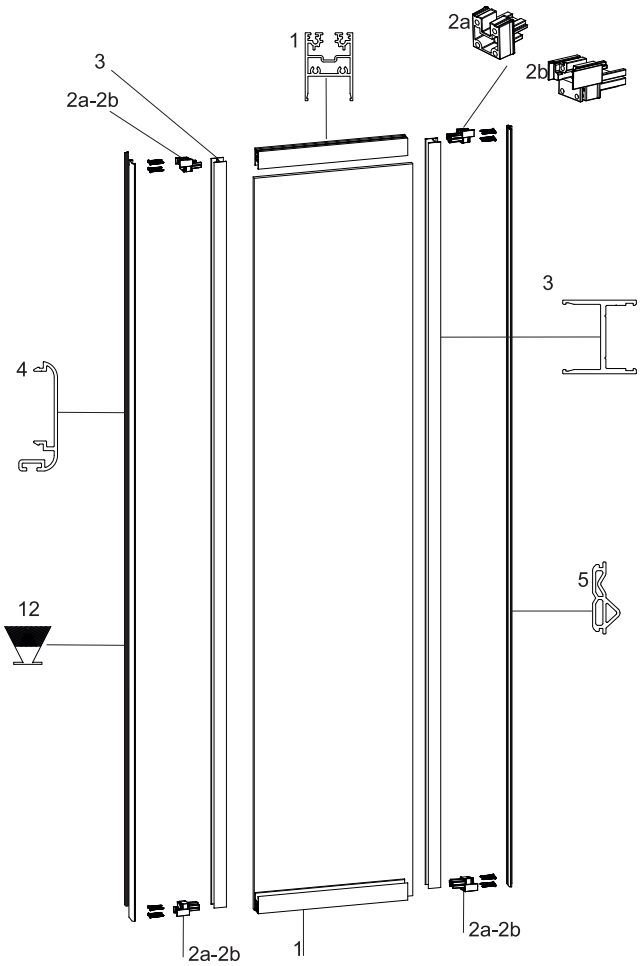

1. Horizontal profile
2a. Internal corner connection
2b. External visible corner connection
3. Vertical profile
4. Vertical brush holder profile
5. Connection gasket for active panel
12. Brush

P35 PROFILE FOR AUTOMATIC SLIDING DOORS

	Internal corner connection	External visible corner connection	
PANEL KIT	3Q87001	3Q87002	P35 Kit for 1 fixed panel L 1500 - H 3000 (for 10mm glass)
	3Q86001	3Q86002	P35 Kit for 1 active panel without door stop L 1500 - H 3000 (for 10mm glass)
	3Q86003	3Q86004	P35 Kit for 1 active panel with door stop* L 1500 - H 3000 (for 10mm glass)
	3Q87003	3Q87004	P35 Kit for 2 fixed panels L 1500 - H 3000 (for 10mm glass)
	3Q86005	3Q86006	P35 Kit for 2 active panels L 1500 - H 3000 (for 10mm glass)

Note: * The kit with door stop does not include the upright rod profile.

Note: The kits do not include the wall opening frame profiles

Note: Kits for telescopic doors are available upon request.

WALL OPENING FRAME KIT	3Q86007	P35 Kit wall opening frame profiles L 3000 - H 3000

Note: The kit for wall opening frame includes 2 vertical profiles, 1 horizontal profile, 1 set of corner junctions, the side gaskets and the brush for the horizontal profile.

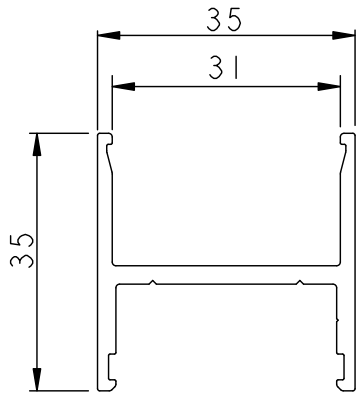

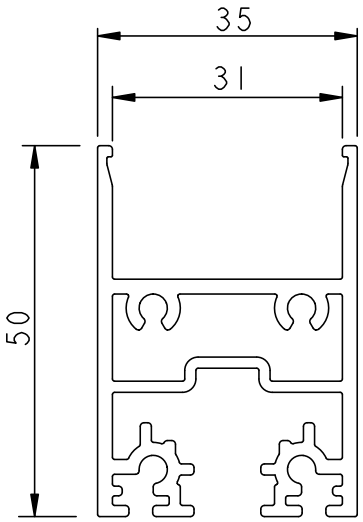

COMPONENTS

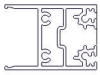	1	8E2104	P35 Horizontal profile for active/fixed frame	6,2 m bar
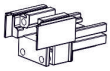	2a	8E2175	P35 External visible corner connection kit with spare parts	For 1 panel
	2b	8E2176	P35 Internal corner connection kit with spare parts	For 1 panel
	3	8E2103	P35 Vertical profile for active/fixed frame	6,2 m bar
	4	8E2102	P35 Vertical brush holder profile	6,2 m bar
	5	8E2155 8E2159	P35 Connection gasket for active panel P35 Connection gasket for active panel	50 m 1 m
	6	8E2105	P35 Door stop matching profile and bottom holding profile	6,2 m bar
	T	8E2120	P35 Door stop matching upright rod profile 100 x 50 mm	3 m bar
	T	8E2121	P35 Door stop matching upright rod profile 25 x 50 mm	3 m bar
	7	8E2106	P35 U-profile for fixed panel lateral and upper wall fixing	6,2 m bar
	8	8E2107	P35 Profile for clear passage coverage	6,2 m bar
	9	8E2101	P35 Vertical wall opening frame profile	6,2 m bar
	10	8E2100	P35 Horizontal wall opening frame profile	6,2 m bar
	11	8E2180	P35 Wall opening frame corner junctions kit	Left and right
	P	8E2170	P35 Floor guide and spare parts kit for active panel	For 1 panel
	P	8E2171	P35 Floor guides and spare parts kit for telescopic door panels	For 2 panel
	12	8E2074	P35 Brush	12 m
	13	8E2150 8E2158	P35 Gasket for wall opening frame P35 Gasket for wall opening frame	50 m 1 m
	14	8E2140 8E2151	P35 Gasket for glass fitting P35 Gasket for glass fitting	50 metri 1 metro
	G	8E2141 8E2156	P35 Gasket for 8 or 20 mm thick glass for active/fixed panel P35 Gasket for 8 or 20 mm thick glass for active/fixed panel	60 m 1 m
	G	8E2142 8E2152	P35 Gasket for 10 or 22 mm thick glass for active/fixed panel P35 Gasket for 10 or 22 mm thick glass for active/fixed panel	60 m 1 m
	G	8E2143 8E2153	P35 Gasket for 12 or 24 mm thick glass for active/fixed panel P35 Gasket for 12 or 24 mm thick glass for active/fixed panel	90 m 1 m
	G	8E2144 8E2154	P35 Gasket for 14 or 26 mm thick glass for active/fixed panel P35 Gasket for 14 or 26 mm thick glass for active/fixed panel	125 m 1 m

P45 Profile for automatic sliding doors



The P45 profile is an adjustment profile for the common R40 system with rounded anti-crushing, anti-cutting and anti-grazing corners complying with the EN 16005 standard about safety for motorized pedestrian doors. Custom-cut panel kit supplied with brushes, gaskets and glass-holders for 10 to 12mm glass or, alternatively, with the necessary components to complete the panel assembly with the R40 system.

Double panel door with full break-out system

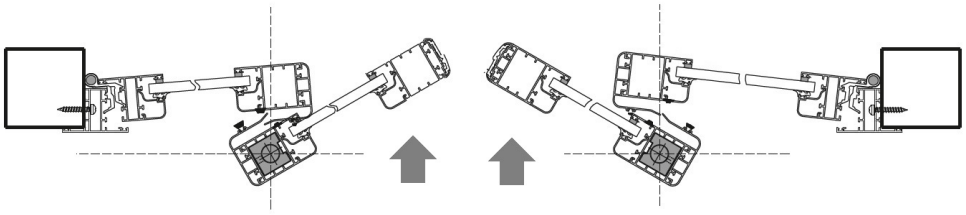

Double panel door with simple break-out system

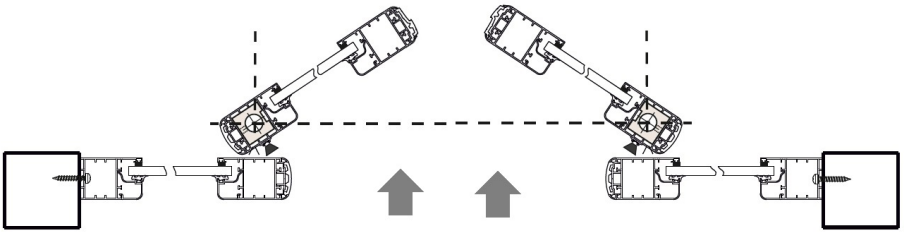

Double panel door without break-out system

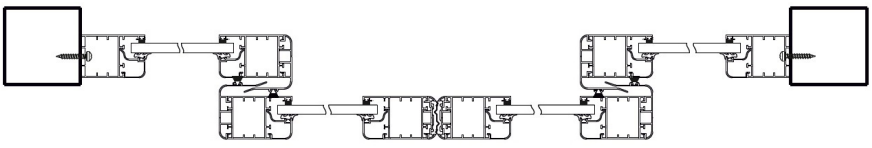

Simple break-out system for active panel without door stop

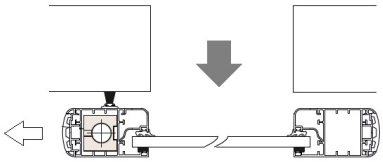

Simple break-out system for active panel with door stop

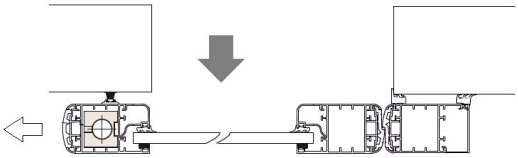

Active panel without door stop and without break-out system

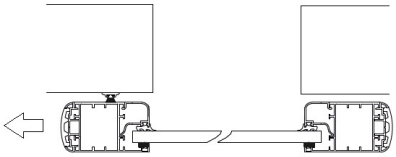

P45 PROFILE WITH S10 BREAKOUT SYSTEM

TOPP breakout systems are designed to meet the safety requirements for escape routes with exit doors.
The breakout system can be fitted to all TOPP automatic linear and telescopic sliding doors. The system consists of the S10 breakout adapters and fittings compatible with P45 or equivalent profiles. The system is suitable for both simple breakout and for full breakout with active and semi-fixed panels. Extremely flexible in size, it is available for a minimum opening width of 800 mm (single panel) up to 4800 mm (double active panels plus double semi-fixed panels). Maximum weight 125 kg per panel (depending on width). In combination with safety devices (sensors), in accordance with EN60335-2-103, EN16005 and DIN18650-1, the breakout systems guarantee the maximum safety for users. The breakout force can be easily adjusted by the installer to meet the most demanding requirements.



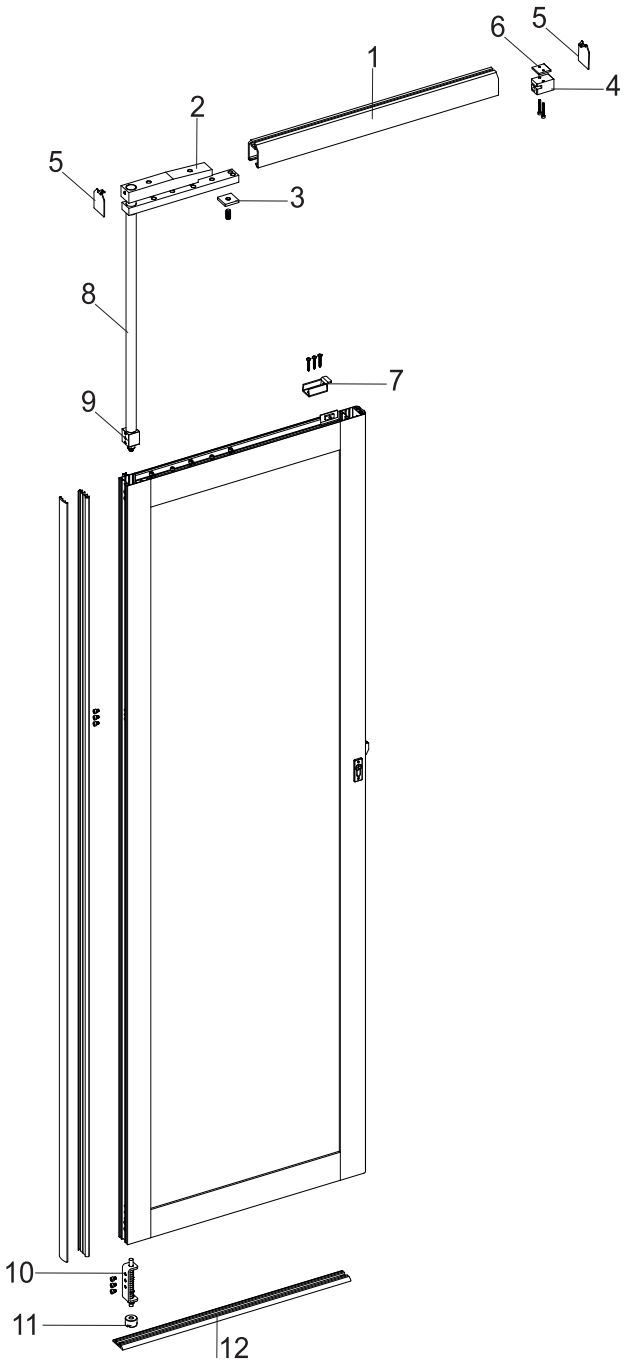

1. Door adapter
2. Upper load-bearing hinge
3. Door retainer setting
4. Ball block
5. Lateral adapter plug
6. Ball block fastener plate
7. Ball block stop
8. Round upper hinge
9. Hinge bushing
10. Bottom guide hinge
11. Plastic runner
12. Door guide track

P45 PROFILES FOR AUTOMATIC SLIDING DOORS

PANEL KIT

3Q81001	P45 Kit for 1 active panel without door stop
3Q81002	P45 Kit for 1 active panel with door stop
3Q81003	P45 Kit for 2 active panels
3Q81004	P45 Kit for 1 active panel without door stop + 1 fixed panel
3Q81005	P45 Kit for 1 active panel with door stop + 1 fixed panel
3Q81006	P45 Kit for 2 active panels + 2 fixed panels
3Q81007	P45 Simple break-out kit for 1 active panel without door stop
3Q81008	P45 Simple break-out kit for 1 active panel with door stop
3Q81009	P45 Simple break-out kit for for 2 active panels
3Q81010	P45 Simple break-out kit for 1 active panel without door stop + 1 fixed panel
3Q81011	P45 Simple break-out kit for 1 active panel with door stop + 1 fixed panel
3Q81012	P45 Simple break-out kit for 2 active panels + 2 fixed panels
3Q81013	P45 Full break-out kit for 1 active panel + 1 semi-fixed panel
3Q81014	P45 Full break-out kit for 2 active panels + 2 semi-fixed panels

Note: The kits include P45 profiles required for 1500m x 3000mm high panels (for 10 and 12 mm glass) and T10 adapters or S10 break-out system.

Note: Kits for telescopic doors available on request.

KIT ANTIPANICO S10

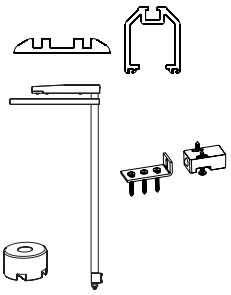

3Q3004	S10 Adapter and track kit - Silver L= 2100
3Q3005	S10 Adapter and track kit - Silver L= 3200
3Q3006	S10 Adapter and track kit - Silver L= 6500
	Adapter + track for break-out system
3Q8050	S10 Simple break-out system kit for P45 and R40 profiles
	Simple break-out system (for 1 active panel)
3Q8052	S10 Full break-out system kit for telescopic doors for P45 and R40
	Full break-out system (for 2 active panels)
3Q3040	S10 Full break-out system kit
	Full break-out system (for 1 semi-fixed panel)

Profile's minimum internal dimensions
for the break-out kit installation

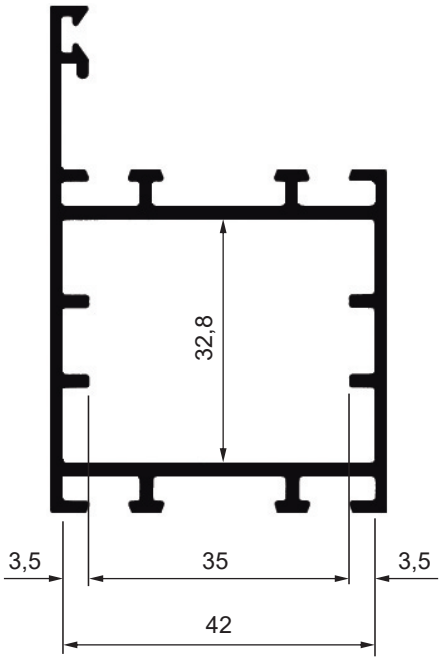

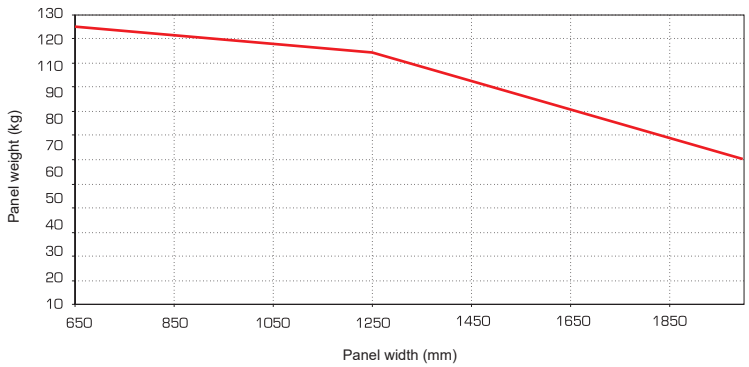

Note: The mechanical break-out anti-panic system can be used with panels that are max 2000 mm wide and that weigh max 70 kg each (for narrower panels, please refer to the relevant diagrams).

Note: The break-out kit weight (15 kg) needs to be added to the total panel weight.

COMPONENTS

	8E2230	Vertical profile, frame and matching part	3 m bar
	8E2200	Vertical profile, frame and matching part	6 m bari
	8E2231	P45 Maze Vertical profile	3 m bar
	8E2201	P45 Maze Vertical profile	6 m bar
	8E2232	P45 Brush profile-holder	3 m bar
	8E2202	P45 Brush profile-holder	6 m bar
	8E2203	P45 Glass holder 2mm (profile to complete the assembly of panel adapter and track)	6.5 m bar
	8E2234	P45 Glass holder 22mm	3 m bar
	8E2204	P45 Glass holder 22mm (profile to complete of active and fixed panel track)	6 m bar
	8E2205	P45 Rounded glass holder 22,5mm	6 m bar
	8E2206	P45 T shaped frame fixed/active	6 m bar
	8E2207	P45 L shaped frame fixed/active	6 m bar
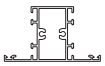	8E2208	P45 Vertical/horizontal frame profile	6 m bar
	8E2209	P45 Reinforced L shaped frame profile fixed	6 m bar
	8E2240	P45 Covering profile for break-out frame	3 m bar
	8E2210	P45 Covering profile for break-out frame	6 m bar
	8E1361	T10 Panel adapter profile silver	6.5 m bar
	8E1362	T10 Panel track profile silver	6.5 m bar
	8E1291	S10 Break-out floor track profile	6.5 m bar
	8E1290	S10 Break-out adapter kit	6.5 m bar
	0E0047	P45 Screw TCAF d4,8x32 UNI6954 Zn	1 panel kit (12 pcs)
	8E2250	P45 Panel connection seal	1 m
	8E2255	P45 Panel connection seal (1 break-out panel)	1 m
	8E2251	P45 Connection seal for panels matching part	1 m
	8E2252	P45 External glass gasket	1 m
	8E2253	P45 Internal Panel connection seal	1 m
	8E2254	P45 Seal 7mm for 10mm glass	1 m
	8E2260	P45 Brush	1 m
	8E2261	P45 Increased brush	1 m
	8E2270	P45 Adapter bracket kit	1 panel kit (4 pcs)
	8E2271	P45 Track bracket kit	1 panel kit (3 pcs)
	8E2272	P45 L shaped bracket for wall fixing	1 panel kit (3 pcs)
	8E2280	Base fixing bracket kit	1 panel kit (2 pcs)
	8E2281	R40 Profiles reinforcement plate kit	1 panel kit (4 pcs)
	8E2282	Semi-fixed panel opening hinge kit	1 semi-fixed panel kit (2 pcs)
	3Q1030	T10 Floor guide for linear door	1 panel kit
	3Q8076	P45 90° active panel break-out mechanical stopper	1 panel kit
	3Q8073	P45 90° semi-fixed panel break-out mechanical stopper	1 panel kit
	3Q8071	MC1 Magnetic switch for full break-out system	2 panel kit

K160 - K250 DIMENSIONS

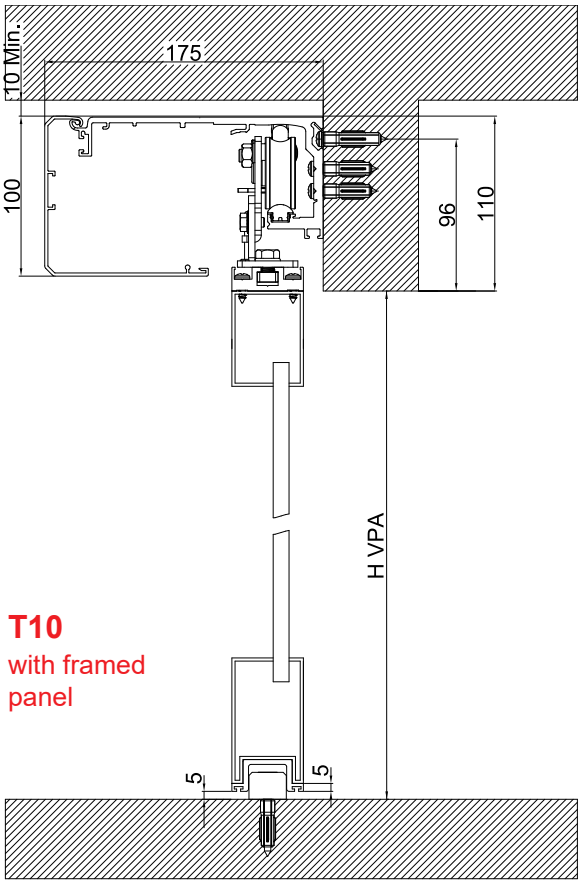

T10
with framed
panel

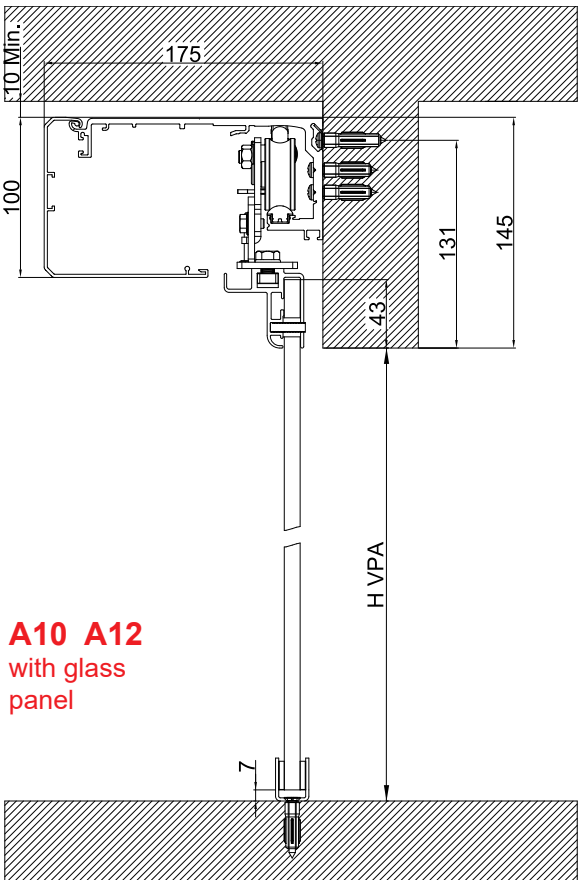

A10 A12
with glass
panel

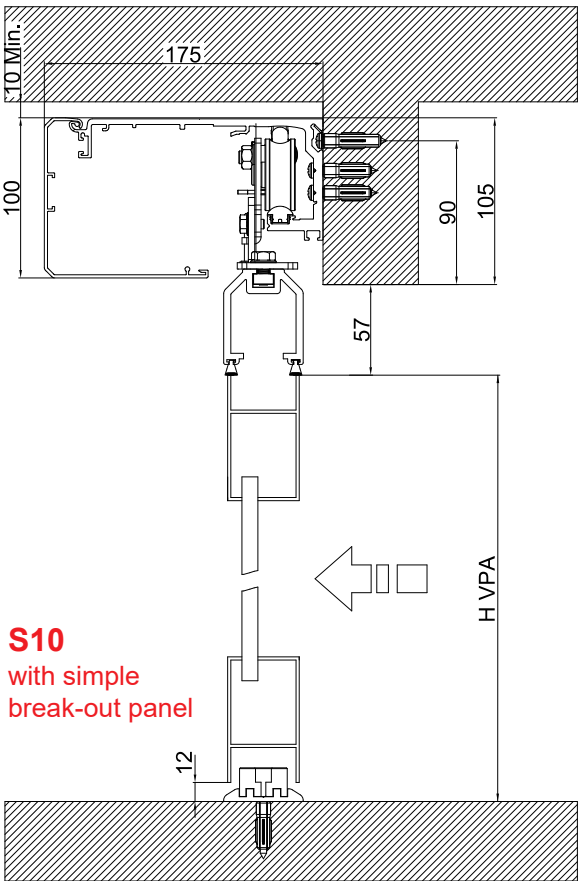

S10
with simple
break-out panel

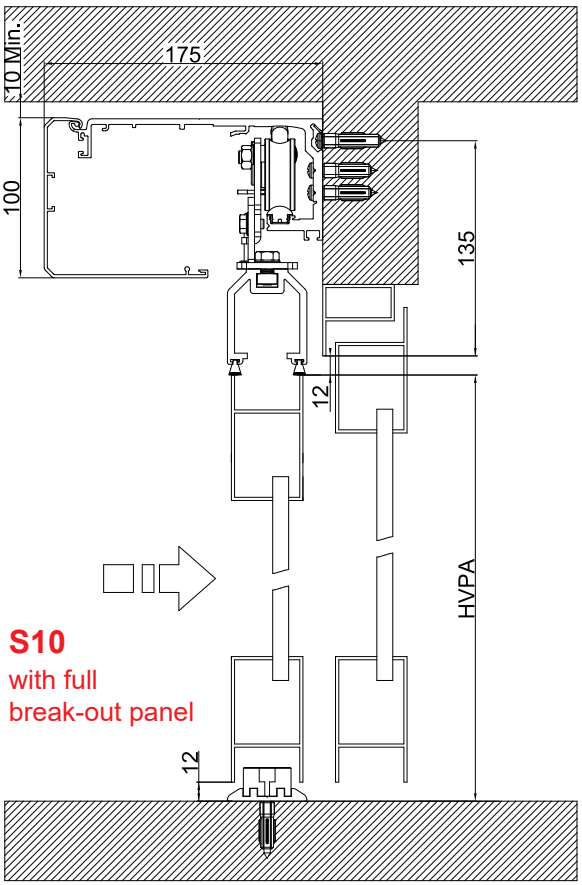

S10
with full
break-out panel

K300 - K600 DIMENSIONS

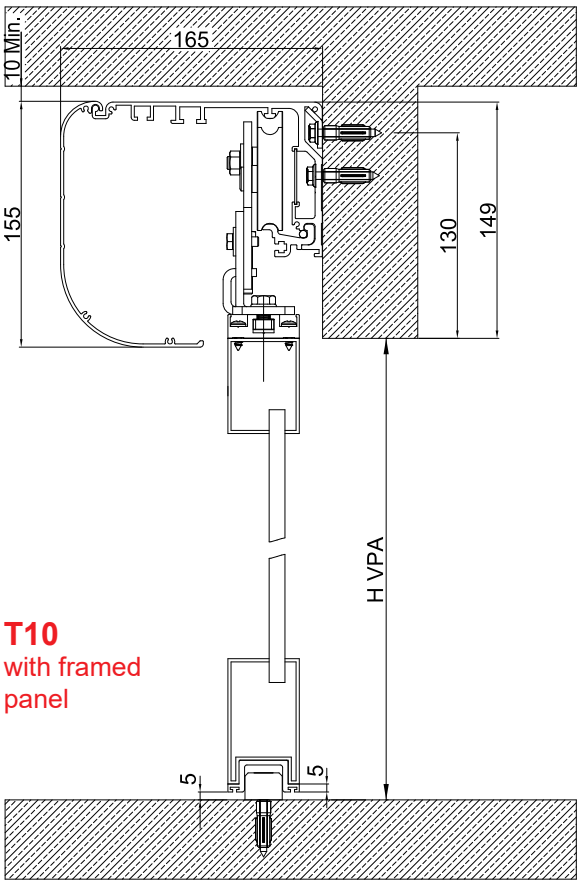

T10
with framed
panel

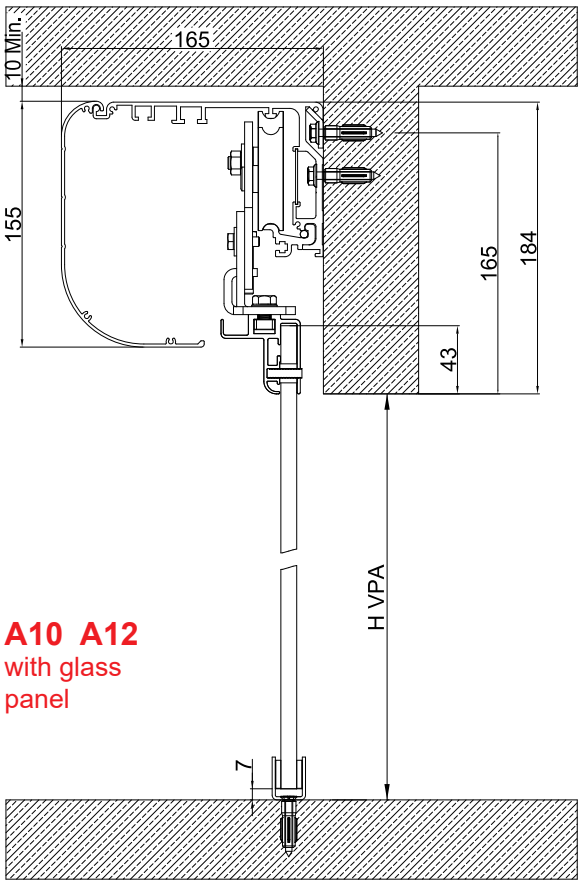

A10 A12
with glass
panel

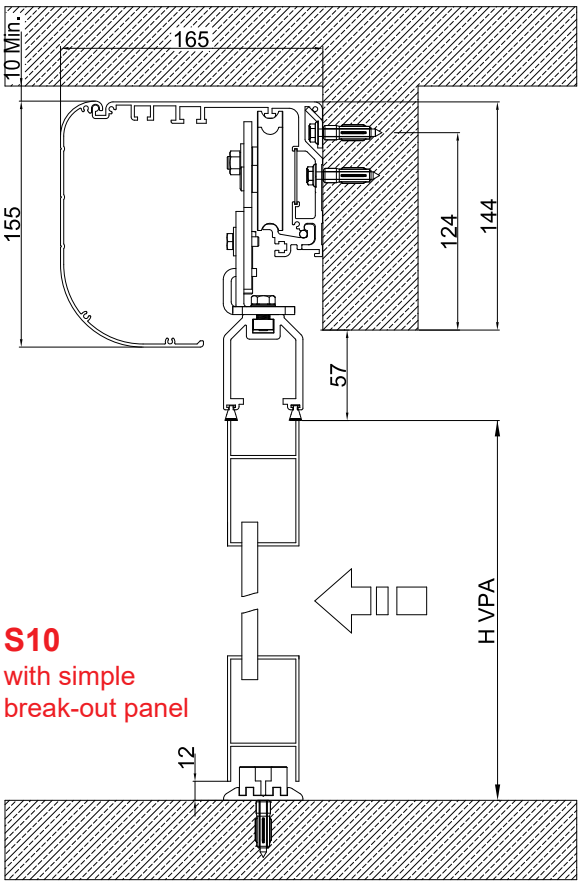

S10
with simple
break-out panel

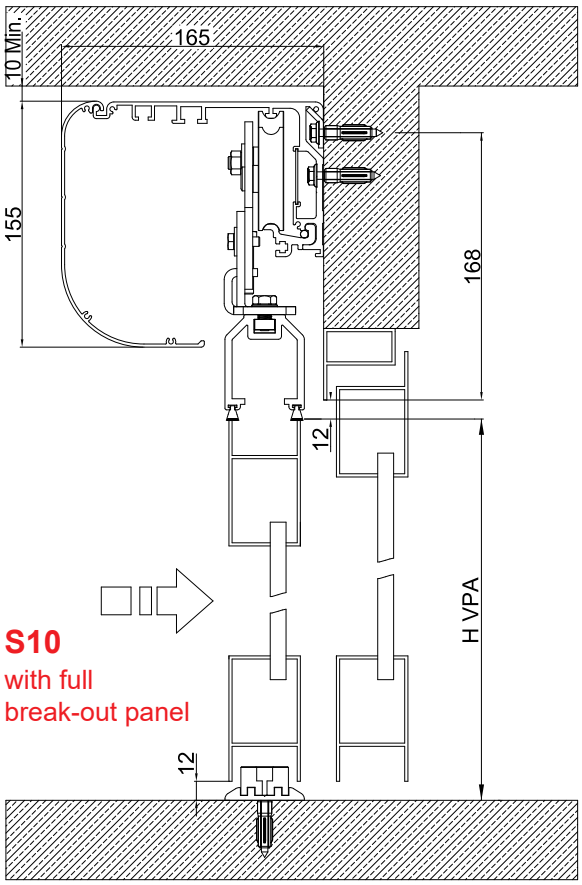

S10
with full
break-out panel

K200T - K280T - K280TR DIMENSIONS

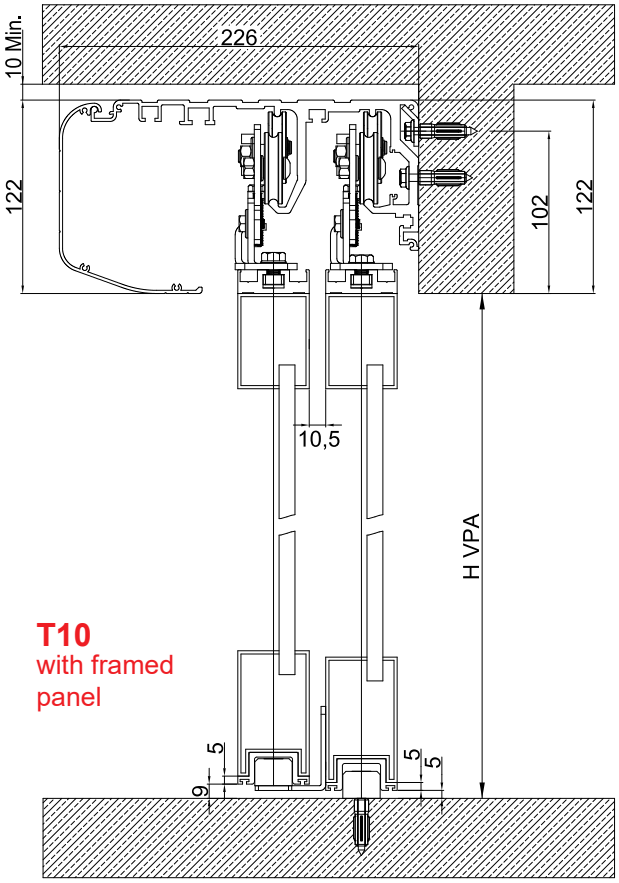

T10
with framed panel

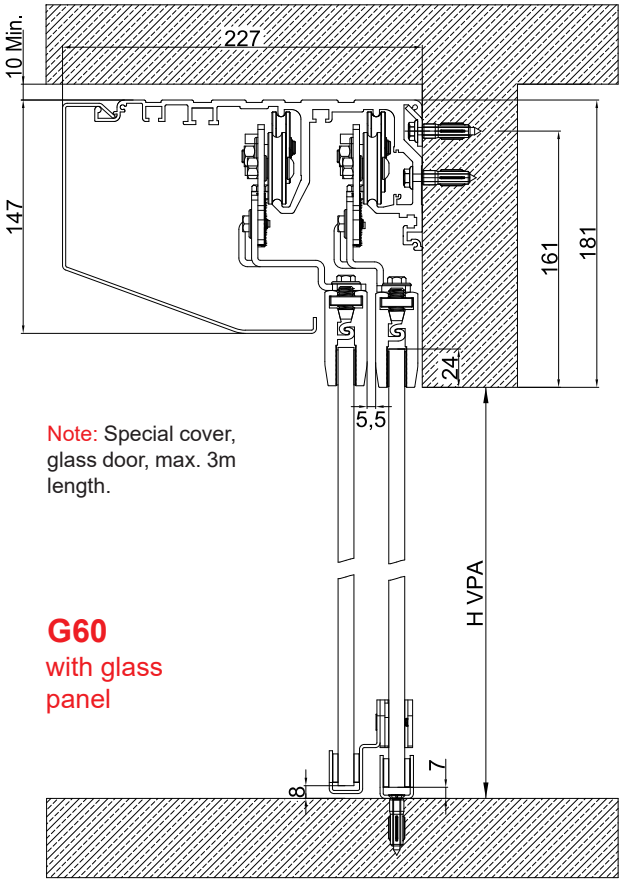

Note: Special cover, glass door, max. 3m length.

G60
with glass panel


VAGHEGGI

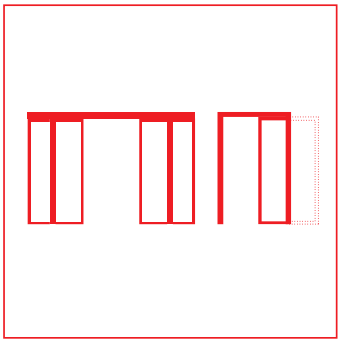

DOOR AUTOMATION

	V1	V1E	K160	K250	K200R	K300	K600	K200T	K280T	DUEVILLE	S200	M200
Single panel max Kg	70	70	160	250	140	300	-	100x2	140x2	140	250	250
Double panel max Kg	-	-	80x2	80x2	125x2	150x2	300x2	50x4	70x4	100x2	o	o
Telescopic	-	-	-	-	-	-	-	●	●	-	-	-
EN16005	●	●	●	●	●	●	●	●	●	●	●	●
Low energy	●	●	●	●	-	●	●	-	-	-	●	●
Full energy	-	-	●	●	●	●	●	●	●	●	●	●
Intensive use	-	-	-	●	●	●	●	-	●	●	-	-
1.000.000 cycles	-	-	●	-	-	-	-	●	-	-	●	●
2.000.000 cycles	-	-	-	●	●	●	●	-	●	●	-	-
Redundant	-	-	-	-	●	-	-	-	o	-	-	-
Plug & Play	●	●	o	o	o	o	o	-	-	-	-	-
Battery backup	-	-	●	●	●	●	●	●	●	●	●	●
Fail secure electriclock	-	-	o	o	-	o	o	o	o	o	o	o
Fail safe electriclock	-	-	o	o	-	o	o	o	o	o	o	o
Bi-stable electric-lock	o	o	o	o	o	o	o	-	-	-	o	o
Built in receiver	●	-	-	-	-	-	-	●	●	●	●	●
Bluetooth	-	-	●	●	-	●	●	o	o	o	o	o
Function selection via App	-	-	●	●	-	●	●	o	o	o	o	o
Parameters setting via App	-	-	●	●	-	●	●	o	o	o	o	o
Fire alarm input	-	-	●	●	●	●	●	●	●	●	●	●
Breakout system	-	-	●	●	●	●	●	●	●	●	●	●
Min. VPA mm	700	700	800	800	800	800	800	900	900	800	600	600
Max. VPA mm	1200	1200	3200	3200	2800	3200	3200	4200	4200	2800	1600	1600
Automation height (mm)	59	59	100	100	120	155	100	120	120	133	110	76
Automation depth (mm)	65	65	175	175	165	165	150	225	225	169	130	137
Automation width (mm)	1200	1200	6500	6500	6500	6500	6500	6500	6500	6800	580	643

Legend

● Included
O Optional
- Not Available



TOPP
tecnologie del movimento

WINDOW AUTOMATION

A full range of chain, stem and rack actuators designed to operate any kind of windows, domes and louvers in natural ventilation and in smoke evacuation systems.

NATURAL VENTILATION

C20
Pag.80



Chain actuator
Thrust force 300 N
Max stroke 360 mm

C30
Pag.82



Chain actuator
Thrust force 300 N
Max stroke 380 mm

C40
Pag.84



Chain actuator
Thrust force 400 N
Max stroke 500 mm

C50
Pag.86



Chain actuator
Thrust force 500 N
Strokes 600-800-1000 mm

C60
Pag.88



Chain actuator
Thrust force 300 N
Max stroke 600 mm

ACK4
Pag.90



Chain actuator
Thrust force 300 N
Max stroke 400 mm

C130
Pag.92



Chain actuator
Thrust force 300 N
Max stroke 360 mm

C160
Pag.94



Chain actuator
Thrust force 300 N
Stroke 360-600-1000 mm

C240
Pag.96



Double chain actuator
Thrust force 400 N
Max stroke 360 mm

C260
Pag.98



Double chain actuator
Thrust force 600 N
Max stroke 600 mm

S80
Pag.100



Linear stem actuator
Thrust force 800N
Max. stroke 1000 mm

T50
Pag.102



Linear rack actuator
Thrust force 500N
Max. stroke 1000 mm

SMOKE EVACUATION

C50 RWA
Pag.110



Chain actuator
Thrust force 500 N
Strokes 600-800 mm

ACK4 RWA
Pag.112



Chain actuator
Thrust force 300 N
Max stroke 400 mm

C160 RWA
Pag.114



Chain actuator
Thrust force 300 N
Strokes 360-600 mm

C160 RWA DOUBLE CHAIN
Pag.116



Double chain actuator
Thrust force 600 N
Strokes 360-600 mm

S80 RWA
Pag.118



Linear stem actuator
Thrust force 800N
Max. stroke 1000 mm

A90 RWA
Pag.120



Actuator for swing opening
Maximum angle 90°

M00
Pag.122

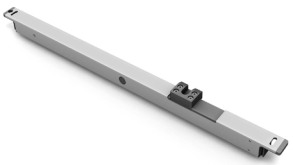

Concealed
multi-point lock drive

M00-1
Pag.122



Exposed electric lock
for windows without
hardware

M00-2
Pag.122

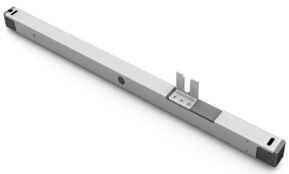

Multi-point lock drive on the
sash to open inwards or on
the frame to open outwards

M00-3
Pag.122

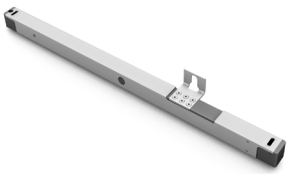

Multi-point lock drive on the
frame for inward opening

M00-4
Pag.122

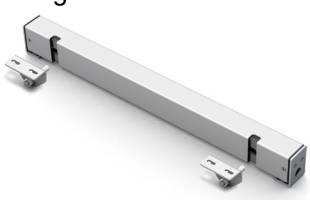

Double electric lock
exposed on the frame
for inward opening





C20

Chain actuator
Thrust force 300 N
Max stroke 360 mm

TANDEM

PRODUCT DESCRIPTION

Electric C20 actuator with double link articulated chain, enclosed in a suitable casing, with different mounting accessories for top and bottom hung windows. Operation at 230V 50Hz or, as an alternative, at 24V DC. Maximum applicable load 300N. Fast hooking and unhooking system of the chain to the window. Adjustment of the force and of the stroke at 240 or 360mm by external knobs (for C20 tandem 360mm fixed stroke, special stroke optional on request). Electronic end of stroke in closing by current absorption control.
CE marked device.





Double link chain with very high resistance on heavy loads.



Long stroke, together with a slim and attractive housing, to allow applications that require minimum size (International patent on the chain path).

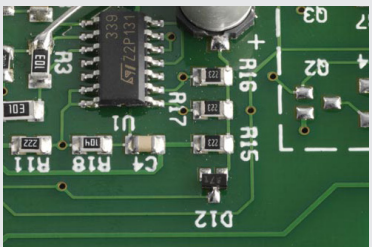

Stroke-end by amperometric absorption in closing to avoid chain adjustments in closing and any possible installation mistake.



TECHNICAL SPECIFICATIONS	C20 230V	C20 24V
Power supply voltage	230V ~ 50Hz	min 21V ~ max 28V d.c.
Max applicable load in thrust	300 N	300 N
Max applicable load in traction	200N	200 N
Stroke	240 and 360 mm	240 and 360 mm
Absorbed current	0,12 A	0,43 A
Idle translation speed	8 mm/s	7,5 mm/s
Duration of the idle stroke	46 s	48s
Double insulated	YES	YES
Service type	S2 of 4 min	S2 of 4 min
Operating temperature	- 5°C + 50°C	- 5°C + 50°C
Protection Class	IP 30	IP 30
Stroke end regulation in closing	not necessary	not necessary
Parallel connection option	YES	YES
Stroke end	Electronic in opening, by amperometric absorption in closing	
Dimensions	362 x 34 x 48 mm	362 x 34 x 48 mm
Weight	0,970 kg	0,940 kg

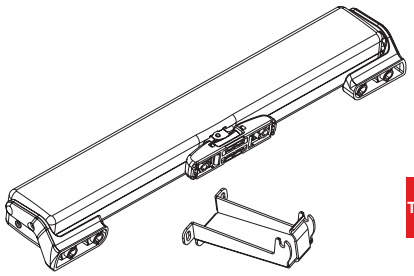

TANDEM

C20 standard 1 push point

3A3#	C20 chain actuator 230V - black
3A3#	C20 chain actuator 230V - grey
3A3#	C20 chain actuator 230V - white
3A3#	C20 chain actuator 24V - black
3A3#	C20 chain actuator 24V - grey
3A3#	C20 chain actuator 24V - white

C20 Tandem standard 2 push points on the same window frame (360mm stroke)

3A7#	Kit C20 chain actuator - tandem version - 230V black
3A7#	Kit C20 chain actuator - tandem version - 230V grey
3A7#	Kit C20 chain actuator - tandem version - 230V white
3A7#	Kit C20 chain actuator - tandem version - 24V black
3A7#	Kit C20 chain actuator - tandem version - 24V grey
3A7#	Kit C20 chain actuator - tandem version - 24V white

Description of the standard pattern for 1 push point

3A3#	C20 chain actuator 230V 1,5mt lead
	Frontal swivel brackets set for top/bottom hung windows
	Upper bracket for bottom hung windows
	ARS Rapid hooking device to the frame
	Spare parts

Description of the standard pattern for 2 push points

3A7#	C20 chain actuator - tandem version - 24V (2 pcs) 6mt lead
	AL2/SW 230V to 24V transformer unit
	Frontal swivel brackets set for top/bottom hung windows (2 pcs)
	Upper bracket for bottom hung windows (2 pcs)
	ARS Rapid hooking device to the window frame (2 pcs)
	Spare parts (2 pcs)

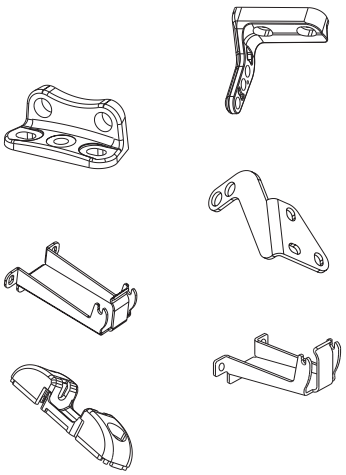

Accessories and spare parts

3A3200	Frontal swivel brackets set for top/bottom hung windows - black
3A3202	Frontal swivel brackets set for top/bottom hung windows - grey
3A3201	Frontal swivel brackets set for top/bottom hung windows - white
3A3210	Swivel brackets set for vertical mounting - black
3A3212	Swivel brackets set for vertical mounting - grey
3A3211	Swivel brackets set for vertical mounting - white
3A3501	Brackets set for installation on the moving part of the window - black
3A3503	Brackets set for installation on the moving part of the window - grey
3A3502	Brackets set for installation on the moving part of the window - white
1A3640	Upper bracket for bottom hung windows - black
1A3642	Upper bracket for bottom hung windows - grey
1A3641	Upper bracket for bottom hung windows - white
1UA001	ARS Rapid hooking device to the window frame - black
1UA003	ARS Rapid hooking device to the window frame - grey
1UA002	ARS Rapid hooking device to the window frame - white
3A3000	Standard spare parts

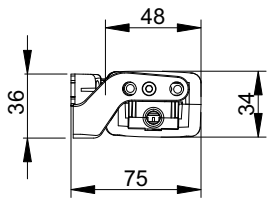

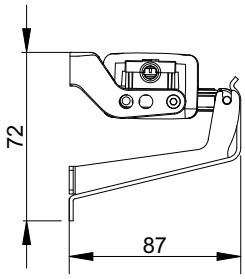

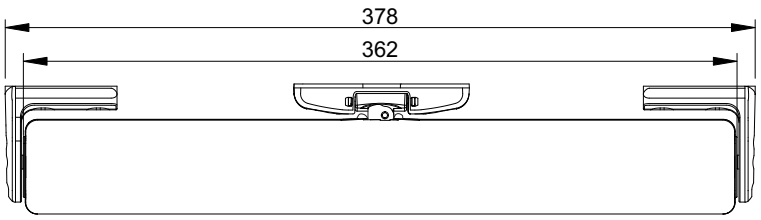

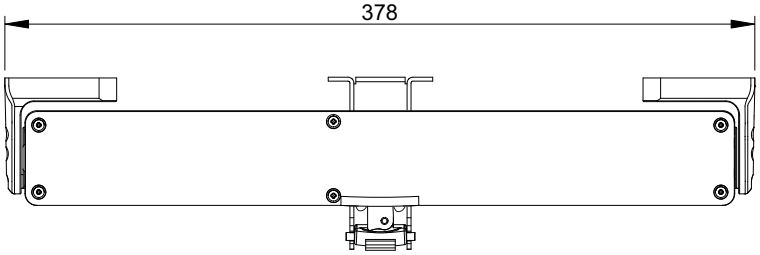

C30

Chain actuator
Thrust force 300 N
Max stroke 380 mm

PRODUCT DESCRIPTION

Electric C30 actuator with double link articulated chain, enclosed in a suitable casing, with different mounting accessories for top and bottom hung windows. Operation at 230V 50Hz or, as an alternative, at 24V DC. Maximum applicable load 300N. Fast hooking and unhooking system of the chain to the window. Adjustment of the stroke at 200 or 380mm by an external knob. Electronic device with acoustic warning to signal erroneous installation to the user. Upon request, a preset “S” version for the synchronous operation of two actuators on the same window is available. CE marked device.



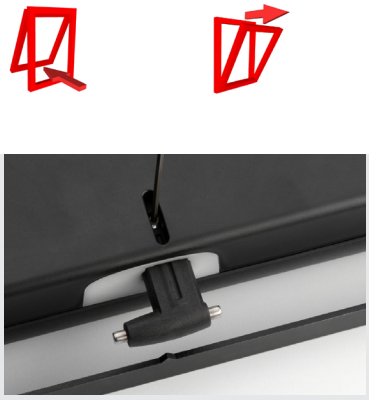

Telescopic chain-end providing a rapid adjustment from 0 to 15mm, even with chain completely retracted into the actuator housing, that allows easy application on windows with overlap.



Easy fixing system, fit for windows of any type and size.



Double link chain with very high resistance on heavy loads.



TECHNICAL SPECIFICATIONS	C30 230V	C30 24V
Power supply voltage	230V ~ 50Hz	24V d.c.
Maximum applicable load in thrust	300 N	300 N
Maximum applicable load in traction	300 N	300 N
Strokes	200 and 380 mm	200 and 380 mm
Absorbed current	0,26 A	1,3 A
Idle translation speed	37 mm/s	22 mm/s
Duration of the idle stroke	11 s	17 s
Double insulated	YES	YES
Service Type	S2 of 4 min	S2 of 4 min
Operating temperature	- 5°C + 50°C	- 5°C + 50°C
Protection Class	IP 30	IP 30
Adjustment of the window frame connection	15 mm	15 mm
Adjustment of pins for the swivel brackets	15 mm	15 mm
Parallel connection option	YES	YES
Synchronous operation of 2 C30s on the same window	with S version	NO
Chain position control	encoder	encoder
Acoustic warning for wrong installation (Buzzer)	YES	YES
Dimensions	337 x 49 x 80 mm	337 x 49 x 80 mm
Weight	1,1 kg	1,1 kg

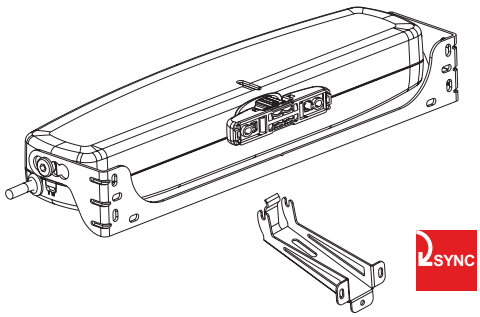

C30 standard 1 push point

3A4#	C30 chain actuator 230V - black
3A4#	C30 chain actuator 230V - grey
3A4#	C30 chain actuator 230V - white
3A4#	C30 chain actuator 24V - black
3A4#	C30 chain actuator 24V - grey
3A4#	C30 chain actuator 24V - white

C30S synchronised for 2 push points on the same window frame

3A42#	C30S Chain actuator 230V black
3A42#	C30S Chain actuator 230V grey
3A42#	C30S Chain actuator 230V white

Description of the standard pattern for 1 push point

3A4#	C30 chain actuator 230V (spare parts included)
	Swivel frontal bracket for top/bottom hung windows
	Upper bracket for bottom hung windows
	ARS Rapid hooking device to the window frame
	Standard spare parts (C30/C40)

Description of the standard pattern for 2 push points

3A42#	C30S chain actuator 230V black 5mt cable
3A42#	C30S chain actuator 230V black 5mt cable

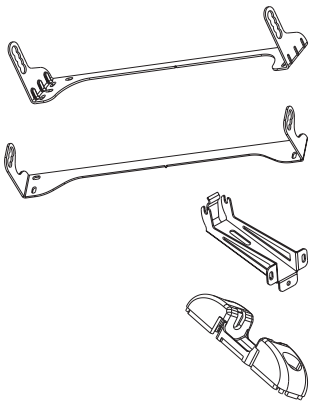

Accessories and spare parts

1A4810	Swivel frontal bracket for top/bottom hung windows - black
1A4812	Swivel frontal bracket for top/bottom hung windows - grey
1A4811	Swivel frontal bracket for top/bottom hung windows - white
1A4815	Swivel brackets set for vertical mounting - black
1A4817	Swivel brackets set for vertical mounting - grey
1A4816	Swivel brackets set for vertical mounting - white
1A4615	Upper bracket for bottom hung windows - black
1A4617	Upper bracket for bottom hung windows- grey
1A4616	Upper bracket for bottom hung windows - white
1UA001	ARS Rapid hooking device to the window frame - black
1UA003	ARS Rapid hooking device to the window frame - grey
1UA002	ARS Rapid hooking device to the window frame - white
3UM000	C30/C40 spare parts

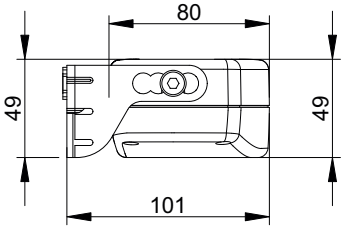

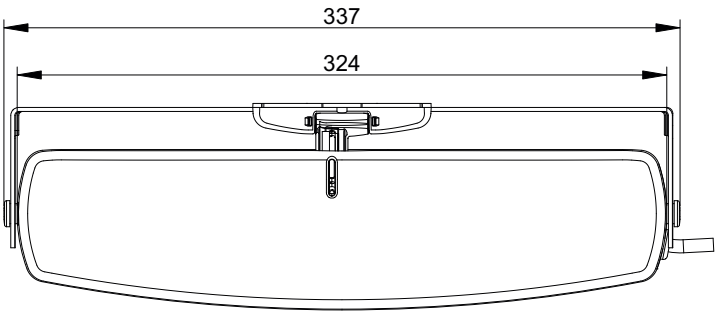

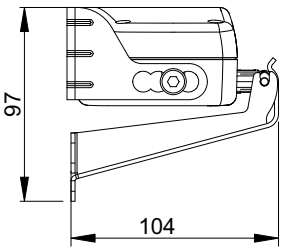

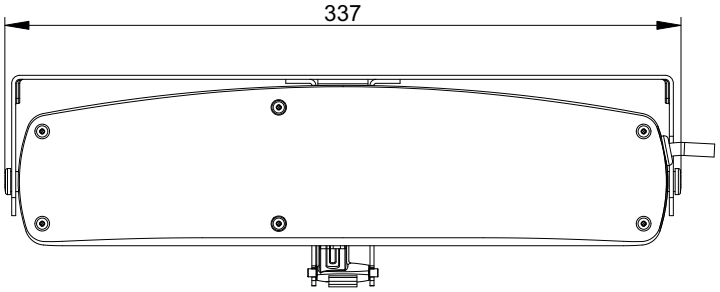

C40

Chain actuator
Thrust force 400 N
Adjustable stroke max.500 mm

PRODUCT DESCRIPTION

Electric C40 actuator with double link articulated chain, enclosed in a suitable casing, with different mounting accessories for top and bottom hung windows. Operation at 230V 50Hz or, as an alternative, at 24V DC. Maximum applicable load 400N. Fast hooking and unhooking system of the chain to the window. Max. stroke 500mm, end of stroke adjustable at 100, 150, 200, 250, 300, 350, 400 mm by an external knob located on both sides of the actuator. Electronic device with acoustic warning to signal erroneous installation to the user. Electronic traction control with speed reduction, during the last 100mm of closing action. High protection IP 55 rated. Upon request, a preset “S” version for the synchronous operation of two actuators on the same window is available. CE marked device.



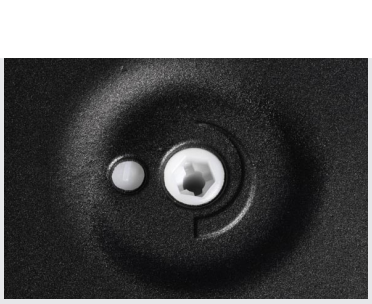

Easy stroke adjustment (7 positions from 100 to 500mm).

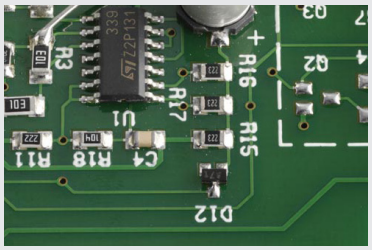

Electronic traction control with speed reduction to avoid chain adjustments in closing and avoid any possible installation mistake.



High protection IP 55 rated.



TECHNICAL SPECIFICATIONS	C40 230V	C40 24V
Power supply voltage	230V ~ 50Hz	24V d.c.
Maximum applicable load in thrust	400 N	400 N
Maximum applicable load in traction	400 N	400 N
Strokes	100 - 150 - 200 - 250 - 300 - 400 - 500 mm	
Absorbed current	0,24 A	1,1 A
Idle translation speed	18,5 mm/s	10,5 mm/s
Duration of the idle stroke	27 s	48 s
Double insulated	YES	-
Service Type	S2 of 5 min	S2 of 8 min
Operating temperature	- 5°C + 50°C	- 5°C + 50°C
Protection Class	IP 55	IP 55
Adjustment of the window frame connection	not necessary	not necessary
Adjustment of pins for the swivel brackets	YES	YES
Parallel connection option	YES	YES
Synchronous operation of 2 C40s on the same window	with S version	NO
Chain position control	Electronic in opening, by amperometric absorption in closing	
Acoustic warning for wrong installation (Buzzer)	YES	YES
Dimensions	388 x 50 x 95 mm	388 x 50 x 95 mm
Weight	1,9 kg	1,9 kg

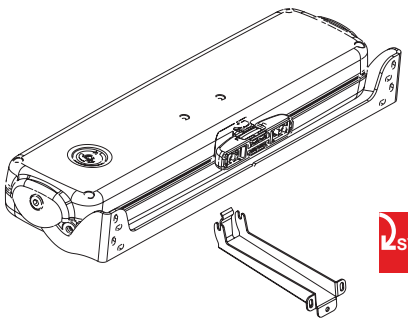

C40 standard 1 push point

3A2#	C40 chain actuator 230V - black
3A2#	C40 chain actuator 230V - grey
3A2#	C40 chain actuator 230V - white
3A2#	C40 chain actuator 24V - black
3A2#	C40 chain actuator 24V - grey
3A2#	C40 chain actuator 24V - white

C40S synchronised for 2 push points on the same window frame

3A22#	C40S Chain actuator 230V black
3A22#	C40S Chain actuator 230V grey
3A22#	C40S Chain actuator 230V white

Description of the standard pattern for 1 push point

3A2#	C40 chain actuator C40 230V (spare parts included)- black
	Swivel frontal bracket for top/bottom hung windows - black
	Upper bracket for bottom hung windows - black
	ARS Rapid hooking device to the window frame - black
	Standard spare parts (C30/C40)

Description of the standard pattern for 2 push points

3A22#	C40S chain actuator 230V black 5mt cable
3A22#	C40S chain actuator 230V black 5mt cable

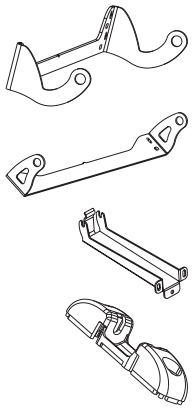

Accessories and spare parts

1A2600	Swivel frontal bracket for top/bottom hung windows - black
1A2602	Swivel frontal bracket for top/bottom hung windows - grey
1A2601	Swivel frontal bracket for top/bottom hung windows - white
1A2610	Swivel bracket for vertical mounting - black
1A2612	Swivel bracket for vertical mounting - grey
1A2611	Swivel bracket for vertical mounting - white
1A2620	Upper bracket for bottom hung windows - black
1A2622	Upper bracket for bottom hung windows- grey
1A2621	Upper bracket for bottom hung windows - white
1UA001	ARS Rapid hooking device to the window frame - black
1UA003	ARS Rapid hooking device to the window frame - grey
1UA002	ARS Rapid hooking device to the window frame - white
3UM000	C30/C40 spare parts

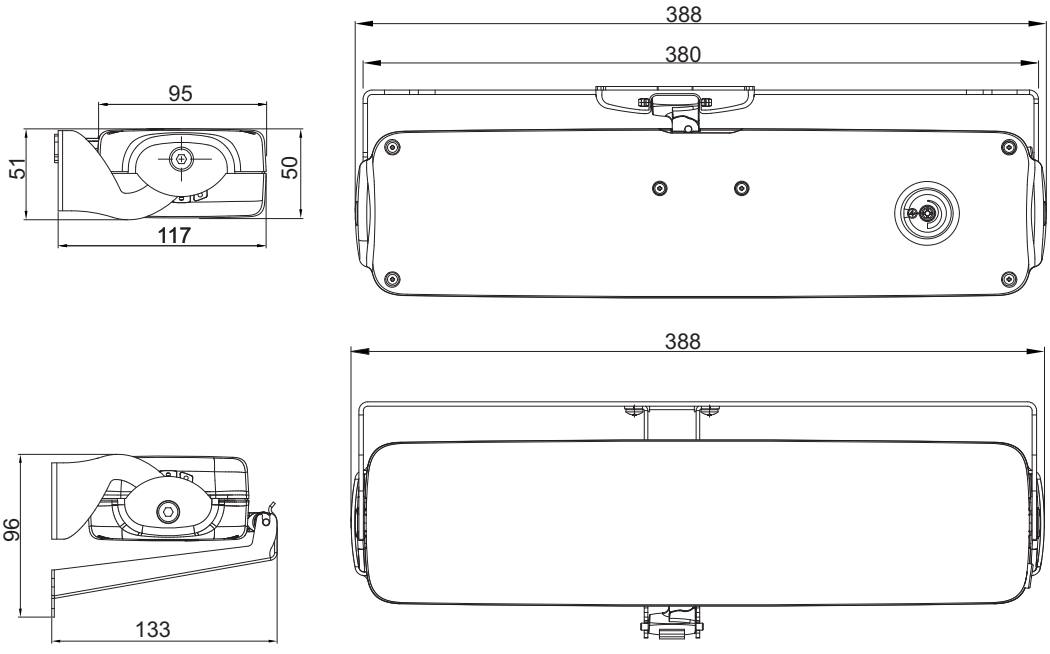

C50

Chain actuator
Thrust force 500N
Stroke 600mm - 800mm - 1000mm

PRODUCT DESCRIPTION

TOPP electric actuator model C50 with double-link chain, in an aluminium profile, available with brackets and accessories for skylights, bottom hung or top hung windows. Operation at 230V 50Hz. Max. thrust force 500N. Stroke 600 - 800 - 1000 mm. Patented chain terminal, attachment to the frame and chain load adjustment to ensure maximum resistance to high loads with long strokes. Pre-set for the synchronous operation of two actuators on the same window.
CE marked device.



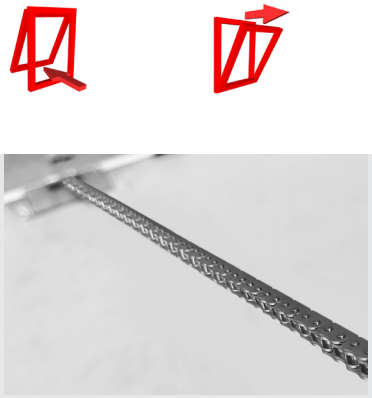

Double-link chain and die-cast aluminum gearbox with shaft supported by ball bearings for higher resistance to heavy loads.



Patented chain load adjustment system to allow the maximum resistance to high loads with long strokes.

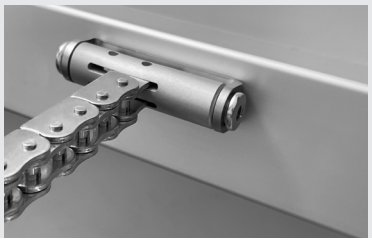

Patented chain terminal with double lateral fixing and swivelling range of two degrees to ensure a greater resistance to heavy loads.



TECHNICAL SPECIFICATIONS	C50 stroke 600 mm			C50 stroke 800 mm		C50 stroke 1000 mm
	Top hung	Bottom hung	Skylight	Top hung	Bottom hung	Bottom hung
Power voltage	230V ~ 50Hz			230V ~ 50Hz		230V ~ 50Hz
Max applicable load in thrust	500 N			300 N		-
Max applicable load in traction	500 N			500 N		500 N
Stroke (+/-20mm)	600 mm			800 mm		1000 mm
Absorbed current	0.2 A			0.2 A		0.2 A
Idle translation speed opening	10,3 mm/s			12.7 mm/s	13.2 mm/s	13.2 mm/s
Idle translation speed closing	10.3 mm/s			8 mm/s	8 mm/s	8 mm/s
Duration of the idle stroke	60 s			67 s	60 s	75 s
Service type	S2 of 4 min			S2 of 4 min		S2 of 4 min
Operating temperature	-5°C + 50°C			-5°C + 50°C		-5°C +50°C
Protection Class	IP 30			IP 30		IP 30
Synchronous operation of 2 actuators on the same window	YES			YES		YES
Parallel connection option	YES			YES		YES
Overlap from 0 to 50 mm with self-learning	YES			YES		YES
Dimensions	811 x 43 x 55 mm			911 x 43 x 55 mm		1011 x 43 x 55 mm

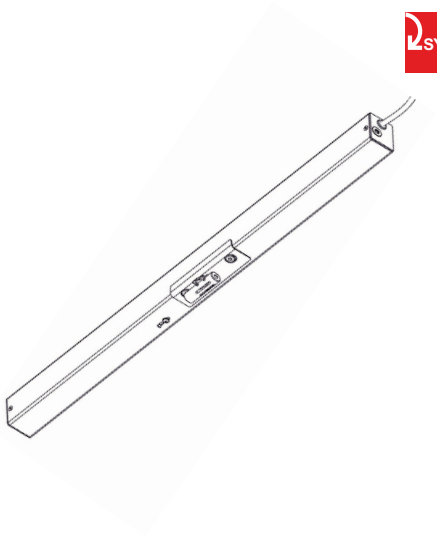

C50 chain actuator with accessories for application on top hung windows

3E40#	C50 chain actuator 230V 600mm stroke for top hung windows
3E40#	C50 chain actuator 230V 800mm stroke for top hung windows

C50 chain actuator with accessories for application on bottom hung outward opening windows

3E40#	C50 chain actuator 230V 600mm stroke for bottom hung outward opening
3E40#	C50 chain actuator 230V 800mm stroke for bottom hung outward opening
3E40#	C50 chain actuator 230V 1000mm stroke for bottom hung outward opening

C50 chain actuator with accessories for application on bottom hung inward opening windows

3E40#	C50 chain actuator 230V 600mm stroke for bottom hung inward opening
3E40#	C50 chain actuator 230V 800mm stroke for bottom hung inward opening
3E40#	C50 chain actuator 230V 1000mm stroke for bottom hung inward opening

Description of the standard pattern for 1 push point application on top hung windows

3E40#	C50 chain actuator 230V 600mm stroke
	Brackets for top/bottom hung outward opening
	Hooking device for top and bottom hung outwards opening
	Standard spare parts

Description of the standard pattern for 2 push points application on top hung windows

3E40#	C50 chain actuator 230V 600mm stroke
3E40#	C50 chain actuator 230V 600mm stroke

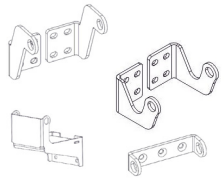

Accessories and spare parts

3E4100	Brackets for top-hung/bottom-hung outward opening
3E4101	Brackets for bottom-hung inward opening or vertical mounting
1E4604	Upper bracket for bottom hung windows
1E4820	Hooking device for top-hung and bottom hung outwards opening
3E4001	Standard spare parts

Corsa Stroke	L1
600	817
800	917

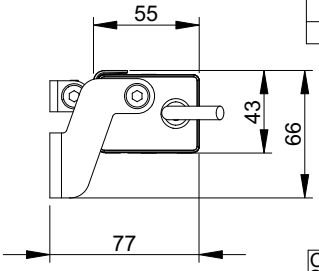

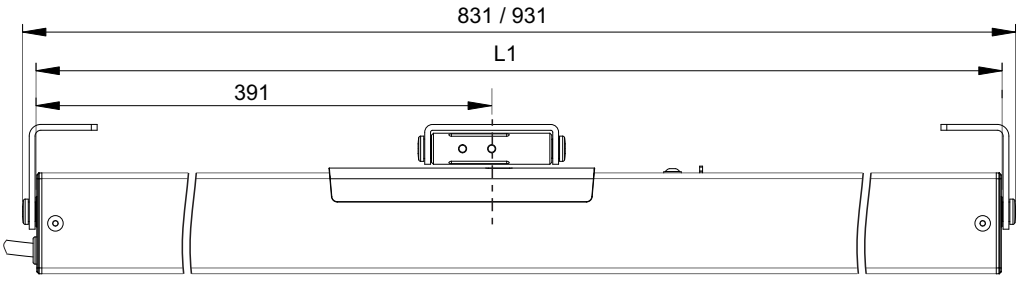

Corsa Stroke	L1
600	817
800	917
1000	1017

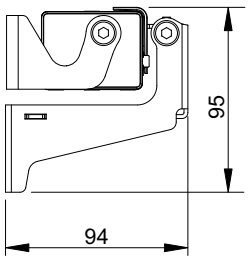

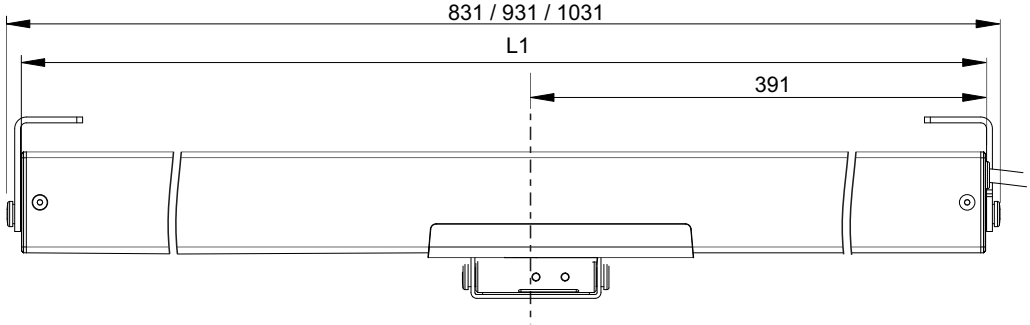

C60

Chain actuator
Thrust force 300 N
Max stroke 600 mm

PRODUCT DESCRIPTION

Electric C60 actuator with double link articulated chain, enclosed in a suitable casing, with different mounting accessories for top or bottom hung windows. Operation at 230V 50Hz or, as an alternative, at 24V DC. Maximum applicable load 300N. Adjustment of the force and of the stroke at 510 or 600mm by external knobs. Electronic end of stroke in closing by current absorption control.
CE marked device.





Long stroke, together with a slim and attractive housing, to allow applications that require minimum size.



Special hooking of chain to window to guarantee very high resistance with a long stroke even on top hung windows.



Simple swivel bracket for fast installation.



TECHNICAL SPECIFICATIONS	C60 230V	C60 24V
Power supply voltage	230V ~ 50Hz	24V d.c.
Max applicable load in thrust	300N (max. stroke 510) - 250N (max. stroke 600)	
Max applicable load in traction	200 N	200 N
Stroke	510 mm and 600 mm	510 mm and 600 mm
Absorbed current	0,14 A	0,49 A
Idle translation speed	8 mm/s	7,5 mm/s
Duration of the idle stroke	75 s	80 s
Service type	S2 of 4 min	S2 of 4 min
Operating temperature	- 5°C + 50°C	- 5°C + 50°C
Protection Class	IP 30	IP 30
Parallel connection option	YES	YES
Stroke end	Electronic in opening, by amperometric absorption in closing	
Dimensions	470 x 34 x 48 mm	470 x 34 x 48 mm
Weight	1,5 kg	1,5 kg

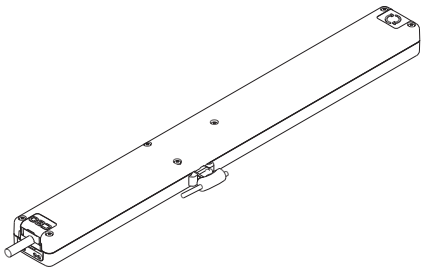

C60 chain actuator with accessories for application on top hung windows

3E30#	C60 chain actuator 230V - black
3E30#	C60 chain actuator 230V - grey
3E30#	C60 chain actuator 230V - white
3E30#	C60 chain actuator 24V - black
3E30#	C60 chain actuator 24V - grey
3E30#	C60 chain actuator 24V - white

C60 chain actuator with accessories for application on bottom hung windows

3E30#	C60 chain actuator 230V - black
3E30#	C60 chain actuator 230V - grey
3E30#	C60 chain actuator 230V - white
3E30#	C60 chain actuator 24V - black
3E30#	C60 chain actuator 24V - grey
3E30#	C60 chain actuator 24V - white

C60 chain actuator with accessories for application on vertical mounting windows

3E30#	C60 chain actuator 230V - black
3E30#	C60 chain actuator 230V - grey
3E30#	C60 chain actuator 230V - white
3E30#	C60 chain actuator 24V - black
3E30#	C60 chain actuator 24V - grey
3E30#	C60 chain actuator 24V - white

Description of the standard pattern for application on top hung windows

3E30#	C60 chain actuator 230V with sash bracket for top hung windows
	Frontal swivel brackets set for top/bottom hung windows
	Hooking device to the frame for top hung windows – black
	Standard spare parts

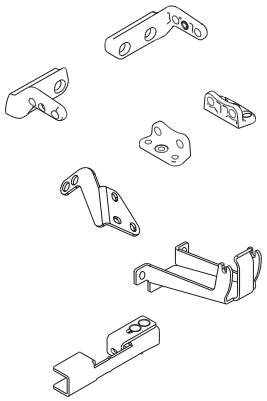

Accessories and spare parts

3A3200	Frontal swivel brackets set for top/bottom hung windows - black
3A3202	Frontal swivel brackets set for top/bottom hung windows - grey
3A3201	Frontal swivel brackets set for top/bottom hung windows - white
3A3210	Swivel brackets set for vertical mounting - black
3A3212	Swivel brackets set for vertical mounting - grey
3A3211	Swivel brackets set for vertical mounting - white
3E3130	Brackets set for installation on the moving part of the window - black
3E3132	Brackets set for installation on the moving part of the window - grey
3E3131	Brackets set for installation on the moving part of the window - white
1E3400	Upper bracket for bottom hung windows - black
1E3402	Upper bracket for bottom hung windows - grey
1E3401	Upper bracket for bottom hung windows - white
3E3100	Hooking device to the frame for top hung windows – black
3E3105	Hooking device to the frame for app. on vertical mounting windows - black
3A3000	Standard spare parts

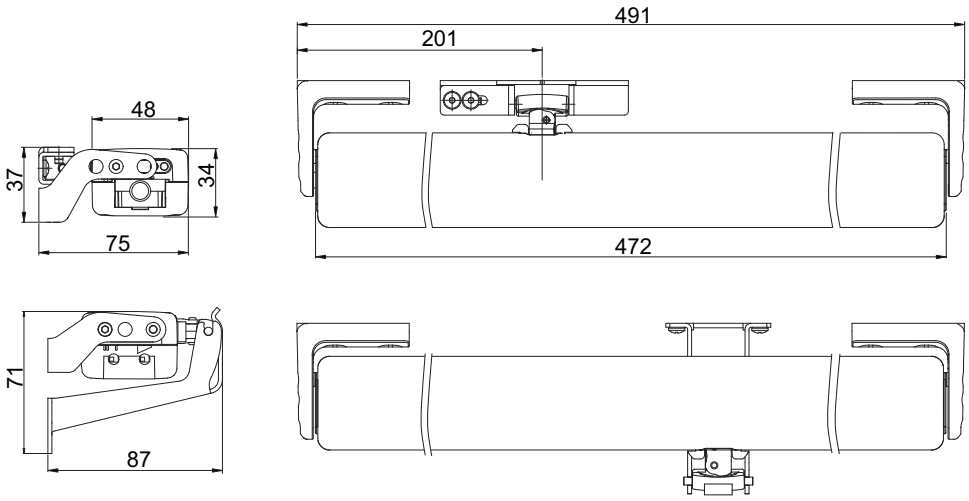

ACK4

Chain actuator
Thrust force 300 N
Adjustable stroke max.400 mm

IP66 SYNC

PRODUCT DESCRIPTION

Electric actuator model ACK4 with a double link articulated stainless steel chain, enclosed in a special diecast aluminum casing, painted with epoxy powders, with different mounting accessories for top and bottom hung windows. Operation at 230V 50Hz. or, as an alternative, at 24V DC. Max. traction and thrust force 300N. End of stroke adjustable at 100, 150, 200, 250, 300, 350, 400 mm by an external knob located on both sides of the actuator. Electronic device with acoustic warning to signal erroneous installation (buzzer). Upon request, a preset “S” version for the synchronous operation of two actuators on the same window is available. High protection IP 55 rated. Available IP66 version (fixed stroke).
CE marked device.



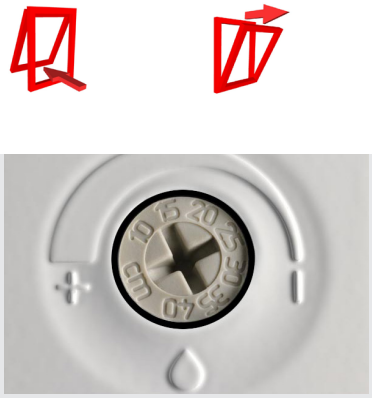

Easy stroke adjustment in 7 positions from 100 to 400mm.
(International patent)



Double link articulated stainless steel chain.

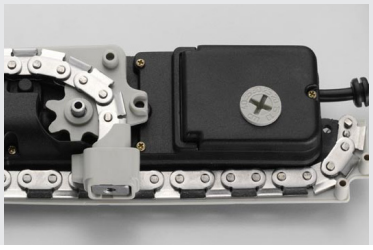

High protection IP 55 rated
(available special IP66 version).



TECHNICAL SPECIFICATIONS	ACK4 230V	ACK4 24V
Power supply voltage	230V ~ 50Hz	24V d.c.
Maximum applicable load in thrust	300 N	300 N
Maximum applicable load in traction	300 N	300 N
Strokes	100 - 150 - 200 - 250 - 300 - 350 - 400 mm	
Absorbed current	0,32 A	1,35 A
Idle translation speed	27 mm/s	17 mm/s
Duration of the idle stroke	15 s	23 s
Double insulated	YES	-
Service Type	S2 of 2 min	S2 of 3 min
Operating temperature	- 5°C + 50°C	- 5°C + 50°C
Protection Class	IP 55 (available special IP66 version)	
Adjustment of the window frame connection	10 mm	10 mm
Adjustment of pins for the swivel brackets	YES	YES
Parallel connection option	with S version	with S version
Synchronous operation of 2 ACK4s on the same window	YES	YES
Chain position control	encoder	encoder
Acoustic warning for wrong installation (Buzzer)	YES	YES
Dimensions	288 x 48 x 83 mm	288 x 48 x 83 mm
Weight	1,9 kg	1,9 kg

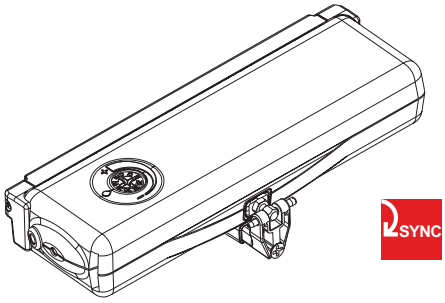

ACK4 standard 1 push point

3A1#	ACK4 chain actuator 230V - black RAL 9005
3A1#	ACK4 chain actuator 230V - grey RAL 9006
3A1#	ACK4 chain actuator 230V - white Euro-White
3A1#	ACK4 chain actuator 24V - black RAL 9005
3A1#	ACK4 chain actuator 24V - grey RAL 9006
3A1#	ACK4 chain actuator 24V - white Euro-White

ACK4S synchronised for 2 push points on the same window frame

3A12#	ACK4S chain actuator 230V - black RAL 9005
3A12#	ACK4S chain actuator 230V - grey RAL 9006
3A12#	ACK4S chain actuator 230V - white Euro-White
3A12#	ACK4S chain actuator 24V - black RAL 9005
3A12#	ACK4S chain actuator 24V - grey RAL 9006
3A12#	ACK4S chain actuator 24V - white Euro-White

ACK4 IP66 version (fixed stroke) available upon request.

Description of the standard pattern for 1 push point

3A1#	ACK4 chain actuator 230V
	Frontal bracket for top/bottom hung windows
	Upper bracket for bottom hung windows
	Hooking device to the frame and spare parts

Description of the standard pattern for 2 push points

3A12#	ACK4S chain actuator 230V - black
3A12#	ACK4S chain actuator 230V - black

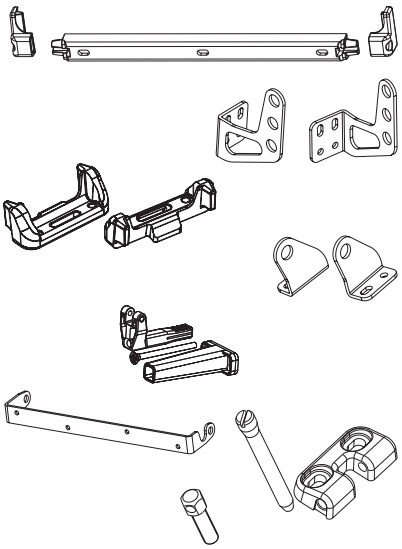

Accessories and spare parts

3A1360	Frontal bracket for top/bottom hung windows - black
3A1362	Frontal bracket for top/bottom hung windows - silver
3A1361	Frontal bracket for top/bottom hung windows - white
3A1391	Large swivel brackets set frontal mounting - black
3A1393	Large swivel brackets set frontal mounting - silver
3A1392	Large swivel brackets set frontal mounting - white
3A1380	Fixed vertical mounting brackets set - black
3A1382	Fixed vertical mounting brackets set - silver
3A1381	Fixed vertical mounting brackets set - white
3A1396	Small vertical mounting brackets set - black
3A1398	Small vertical mounting brackets set - silver
3A1397	Small vertical mounting brackets set - white
3A1355	Upper bracket for bottom hung windows - black
3A1375	Single swivel bracket for bottom hung windows - black
3A1377	Single swivel bracket for bottom hung windows - silver
3A1376	Single swivel bracket for bottom hung windows - white
3A1001	Hooking device to the frame with pin and spare parts
0B0005	Extension pin h 37,5 (overlap 10-20mm)
0B0007	Extension pin h 47,5 (overlap 20-30mm)
0B0006	Extension pin h 57,5 (overlap 30-40mm)

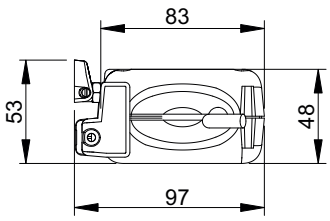

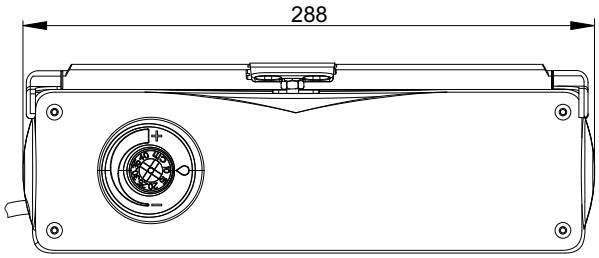

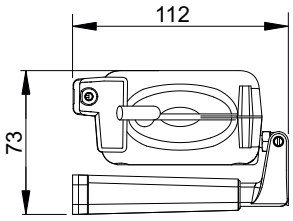

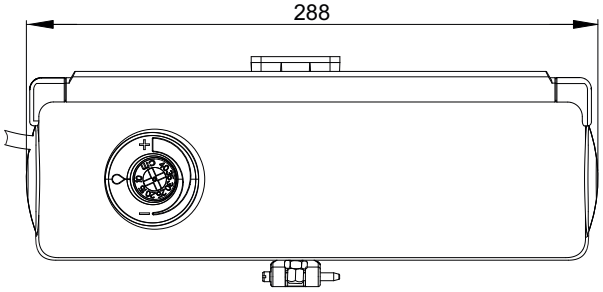

C130

Chain actuator
Thrust force 300N
Max stroke 360mm

PRODUCT DESCRIPTION

Electric actuator Topp model C130 with double-link chain, in an elegant die-cast aluminium profile, with custom-made length from 600 mm to 1200 mm, complete with brackets and accessories for top or bottom hung windows. Operation at 230V ~ 50Hz or, as an alternative, at 24V d.c. Max. thrust force 300N. Fast hooking and unhooking system to the window frame. Max. stroke 360 mm. Electronic end of stroke in closing by current absorption control.
CE marked device.







Tailored profile lengths according to the window frame width.



Cable exit on both sides of the profile.



Innovative and original design.



TECHNICAL SPECIFICATIONS	C130 230V	C130 24V
Power supply voltage	230V ~ 50Hz	min 21V ~ max 28V d.c.
Max applicable load in thrust	300 N	300 N
Max applicable load in traction	200 N	200 N
Stroke	360 mm	360 mm
Absorbed current	0,12 A	0,43 A
Idle translation speed	8 mm/s	7,5 mm/s
Duration of the idle stroke	46 s	48 s
Double insulated	YES	-
Service type	S2 of 4 min	S2 of 4 min
Operating temperature	- 5°C + 50°C	- 5°C + 50°C
Protection Class	IP 30	IP 30
Stroke end regulation in closure	not necessary	not necessary
Connection of two or more actuators in parallel	YES	YES
Stroke end	Electronic in opening, by amperometric absorption in closing	

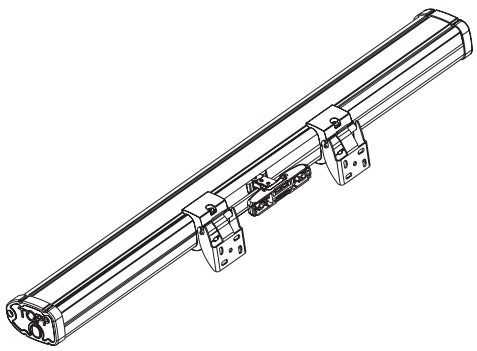

C130 chain actuator (profile's length: 600 mm - 900 mm), stroke 360 mm
application for top hung windows

3A6#	C130 chain actuator 230V
3A6#	C130 chain actuator 24V

C130 chain actuator (profile's length: 910 mm - 1200 mm), stroke 360 mm
application for top hung windows

3A6#	C130 chain actuator 230V
3A6#	C130 chain actuator 24V

C130 chain actuator with on-board receiver

3A6#	C130 chain actuator 230V RR (profile's length: 600 mm - 900 mm)
3A6#	C130 chain actuator 230V RR (profile's length: 910 mm - 1200 mm)

Description of the standard pattern (profile's length: 600 mm - 900 mm)
application for top hung windows

3A6#	C130 chain actuator 230V
	Frontal bracket for top hung windows (2 pcs)
	Clamps set for top hung brackets (2 pcs)
	ARS fast hooking device to the window frame

Note: Part Numbers will be assigned according to the required profile's length.

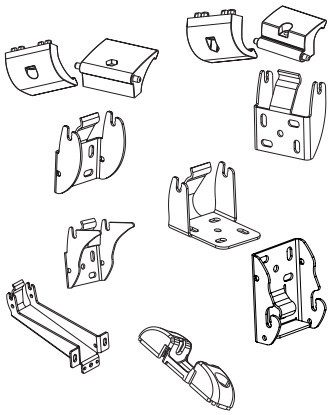

Accessories and spare parts

3A5005	Clamps for top hung windows
3A5006	Clamps for bottom hung windows
1A5822	Slim frontal bracket for top hung windows (window opening min 400mm)
1A5827	Frontal bracket for top hung windows (window opening min 700mm)
1A5823	Bracket for vertical mounting (window opening >350mm)
1A5832	Bracket for installation on bottom hung windows
1A5831	Bracket for bottom-hung outward opening application (window opening min 250mm)
1A5828	Fallback bracket for bottom hung windows
1UA003	ARS Rapid hooking device to the window frame - grey

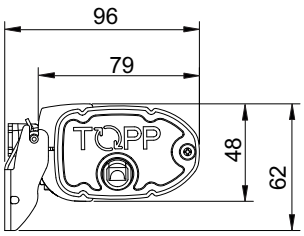

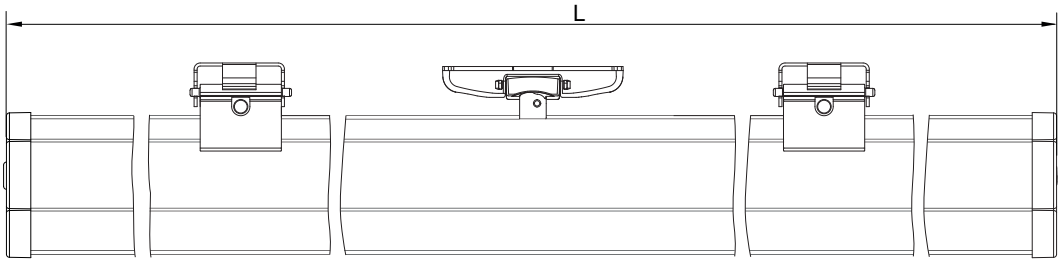

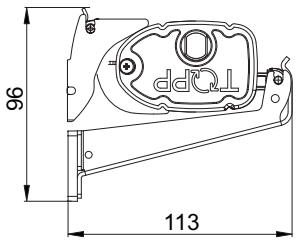

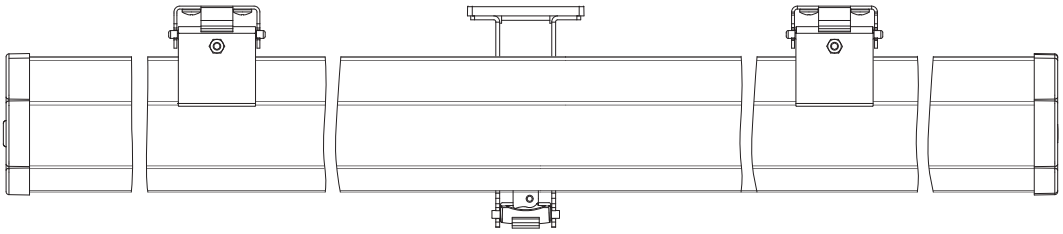

C160

Chain actuator
Thrust force max. 300N
Stroke 360mm - 600mm - 1000mm

PRODUCT DESCRIPTION

Electric actuator Topp model C160 with double-link chain, in an elegant die-cast aluminium profile, complete with brackets and accessories for top or bottom hung windows. Operation at 230V ~ 50Hz. Max. thrust force 300N. Stroke 360 - 600 - 1000 mm. Electronic end of stroke in closing by current absorption control.
CE marked device.





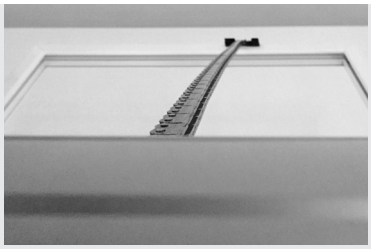

Elegant and attractive aluminium profile with swivel brackets versatile and easy to install.



Available also for installation on side hung windows.

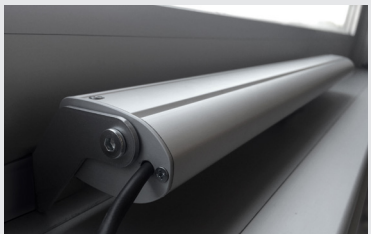

Long chain up to 1 meter enclosed in a slim housing.



TECHNICAL SPECIFICATIONS	C160 stroke 360 mm	C160 stroke 600 mm	C160 stroke 1000 mm
Power voltage:		230V ~ 50Hz	
Max applicable load in thrust	300 N	250 N	50 N
Max applicable load in traction	200 N	200 N	185 N
Stroke for top-hung application	360 mm	600 mm	1000 mm
Stroke for bottom-hung application	322 mm	562 mm	962 mm
Absorbed current	0,12 A	0,14 A	0,14 A
Idle translation speed	8 mm/s	8 mm/s	8 mm/s
Duration of the idle stroke *	45 s	75 s	125 s
Double insulated	YES	YES	YES
Service type	S2 of 4 min	S2 of 4 min	S2 of 4 min
Operating temperature	-5°C + 50°C	-5°C + 50°C	-5°C + 50°C
Protection Class	IP30	IP30	IP30
Stroke end regulation in closure	not necessary	not necessary	not necessary
Parallel connection option	YES	YES	YES
Possibility of installing double push point on the same window	YES	NO	NO
Stroke end	Electronic in opening, by amperometric absorption in closing		

C160 standard 1 push point

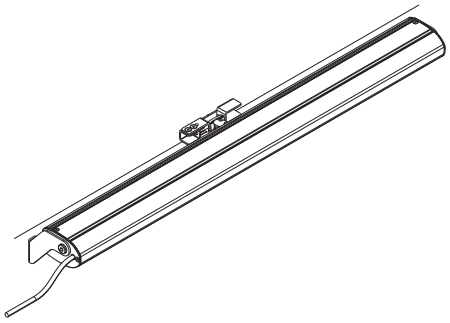

3E26#	C160 chain actuator 230V stroke 360mm top-hung application
3E26#	C160 chain actuator 230V stroke 360mm bottom-hung application
3E26#	C160 chain actuator 230V stroke 360mm outward swinging application
3E26#	C160 chain actuator 230V stroke 360mm inward swinging application
3E25#	C160 chain actuator 230V stroke 600mm top-hung application
3E25#	C160 chain actuator 230V stroke 600mm bottom-hung application
3E25#	C160 chain actuator 230V stroke 600mm outward swinging application
3E25#	C160 chain actuator 230V stroke 600mm inward swinging application
3E27#	C160 chain actuator 230V stroke 1000mm bottom-hung application
3E27#	C160 chain actuator 230V stroke 1000mm outward swinging application
3E27#	C160 chain actuator 230V stroke 1000mm inward swinging application

Description of the standard pattern, 1 push point
Application for top hung windows

3E25#	C160 chain actuator 230V stroke 600mm
	Iron hooking device for top-hung and bottom hung (outwards opening) for C160 600/1000 stroke
	Couple of swivel frontal brackets C160

Accessories and spare parts

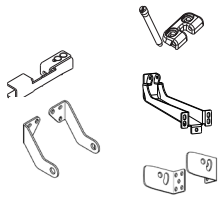

3E2012	Hooking device for top-hung and bottom hung (outwards opening) for C160 360 stroke
3E3100	Iron hooking device for top-hung and bottom hung (outwards opening) for C160 600/1000 stroke
1E2804	C160 bottom-hung bracket for single push point
3E2100	Brackets for top-hung/bottom-hung outwards opening application
3E2101	Brackets for bottom-hung fallback application

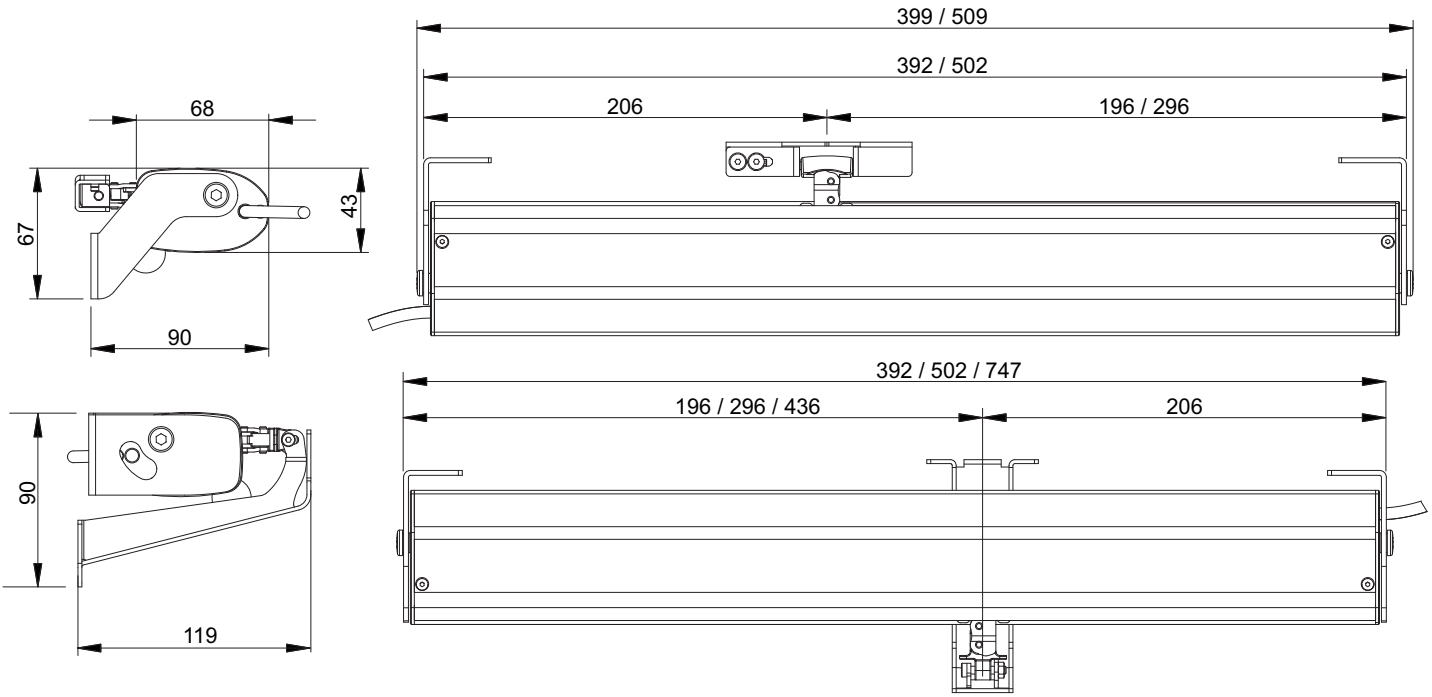

C240

Dual push points chain actuator
Thrust force 400N
Max stroke 360mm



PRODUCT DESCRIPTION

Electric actuator Topp model C240 with 2 double-link chains, in an elegant die-cast aluminium profile, with custom-made length from 1200 mm to 4000 mm, complete with brackets and accessories for top or bottom hung windows. Operation at 230V~50Hz or, as an alternative, at 24V DC. Max. thrust force 400N. Fast hooking and unhooking system to the window frame. Max. stroke 360 mm. Electronic end of stroke in closing by current absorption control.
CE marked device.





Tailored profile lengths according to the window frame width (International patent).



Cable exit on both sides of the profile.



Innovatory and original design.



TECHNICAL SPECIFICATIONS	C240 230V	C240 24V
Power supply voltage	230V ~ 50Hz	min 21V ~ max 28V d.c.
Max applicable load in thrust	400 N	400 N
Max applicable load in traction	300 N	300 N
Stroke	360 mm	360 mm
Absorbed current	0,22 A	0,75 A
Idle translation speed	8 mm/s	7,5 mm/s
Duration of the idle stroke	46 s	48 s
Double insulated	YES	-
Service type	S2 of 4 min	S2 of 4 min
Operating temperature	- 5°C + 50°C	- 5°C + 50°C
Protection Class	IP 30	IP 30
Stroke end regulation in closure	not necessary	not necessary
Parallel connection option	YES	YES
Stroke end	Electronic in opening, by amperometric absorption in closing	

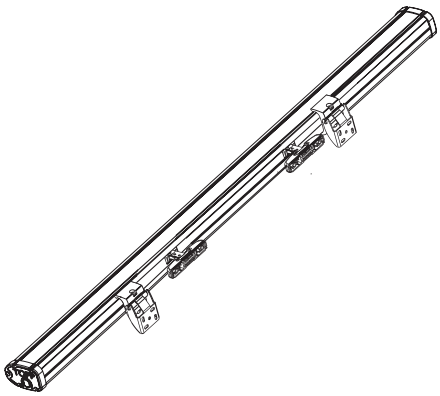

C240 dual push points actuator (profile's length: 1200 - 1500 mm), stroke 360 mm application for top hung windows

3A5#	Dual push points actuator C240 230V
3A5#	Dual push points actuator C240 24V

C240 dual push points actuator (profile's length: 1510 - 2000 mm), stroke 360 mm application for top hung windows

3A5#	Dual push points actuator C240 230 V
3A5#	Dual push points actuator C240 24 V

C240 dual push points actuator (profile's length: 2010 - 2500 mm), stroke 360 mm application for top hung windows

3A5#	Dual push points actuator C240 230 V
3A5#	Dual push points actuator C240 24 V

C240 dual push points actuator (profile's length: 2510 - 3000 mm), stroke 360 mm application for top hung windows

3A5#	Dual push points actuator C240 230 V
3A5#	Dual push points actuator C240 24 V

C240 dual push points actuator (profile's length: 3010 - 4000 mm), stroke 360 mm application for top hung windows

3A5#	Dual push points actuator C240 230 V
3A5#	Dual push points actuator C240 24 V

Description of the standard pattern (profile's length: 1200 - 1500 mm) application for top hung windows

3A5#	Dual push points actuator C240 230 V
	Frontal bracket for top hung windows (2 pcs)
	Clamps set for top hung brackets (2 pcs)
	ARS Fast hooking device to the window frame (2 pcs)

Note: Part Numbers will be assigned according to the required profile's length.

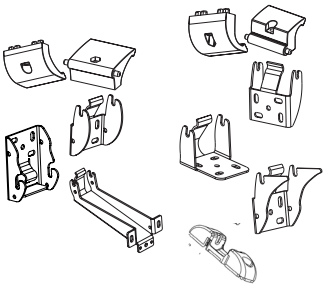

Accessories and spare parts

3A5005	Clamps for top hung windows
3A5006	Clamps for bottom hung windows
1A5822	Slim frontal bracket for top hung windows (window opening min. 400mm)
1A5827	Frontal bracket for top hung windows (window opening min. 700mm)
1A5823	Bracket for vertical mounting (window opening >350mm)
1A5832	Bracket for installation on bottom hung windows
1A5831	Bracket for bottom-hung outward opening (window opening 400mm)
1A5828	Fallback bracket for bottom hung windows
1UA003	ARS Rapid hooking device to the window frame - grey

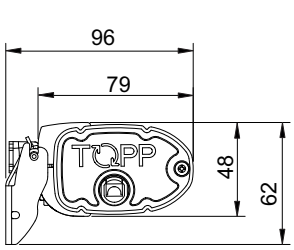

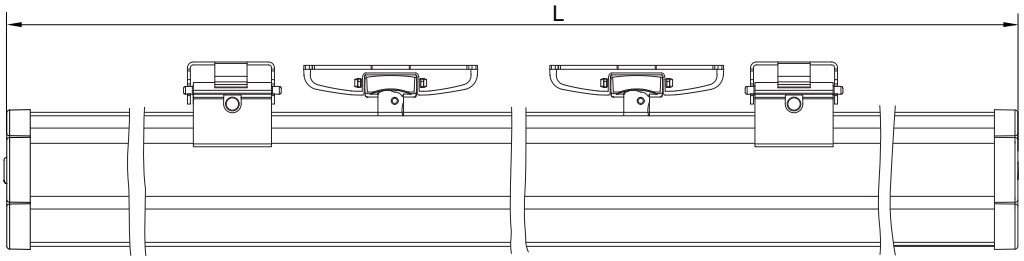

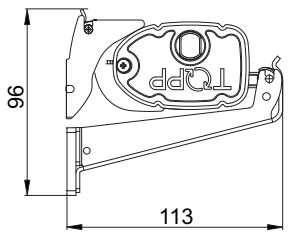

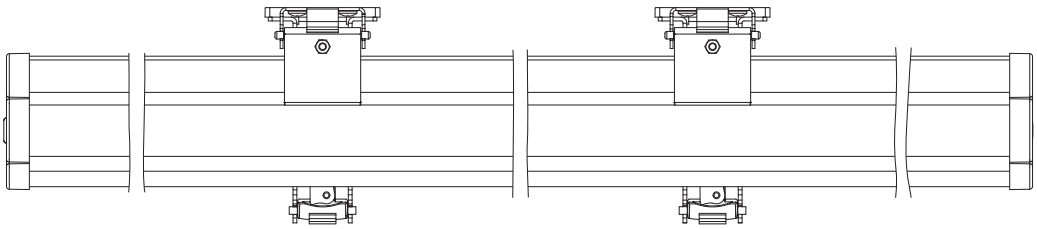

C260

Dual push points chain actuator
Thrust force 600N
Max stroke 600mm



PRODUCT DESCRIPTION

Electric actuator Topp model C260 with 2 double-link chains, in an elegant die-cast aluminium profile, with custom-made length from 1550 mm to 4000 mm, complete with brackets and accessories for top and bottom hung windows. Operation at 230V~50Hz. Max. thrust force 600N. Max. stroke 600 mm. Electronic end of stroke in closing by current absorption control.
CE marked device.





Tailored profile lengths according to the window frame width (International patent).



Special hooking of chain to window to guarantee very high resistance with a long stroke even on top hung windows.



Innovatory and original design.



TECHNICAL SPECIFICATIONS	C260 230V
Power supply voltage	230V ~ 50Hz
Max applicable load in thrust	600 N
Max applicable load in traction	600 N
Stroke	600 mm
Absorbed current	0,4A
Idle translation speed	13 mm/s
Duration of the idle stroke	46 s
Double insulated	YES
Service type	S2 of 4 min
Operating temperature	- 5°C + 50°C
Protection Class	IP 30
Stroke end regulation in closure	not necessary
Parallel connection option	YES
Stroke end	Electronic in opening, by amperometric absorption in closing

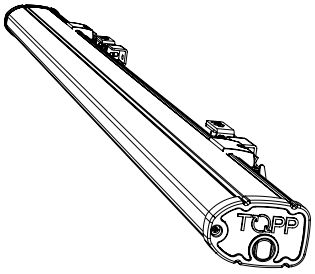

C260 dual push points actuator (profile's length: 1550 - 2000 mm), stroke 600 mm

3E15#	Dual push points actuator C260 230 V for top hung windows
3E15#	Dual push points actuator C260 230 V for bottom hung windows
3E15#	Dual push points actuator C260 230 V for swimging windows

C260 dual push points actuator (profile's length: 2010 - 2500 mm), stroke 600 mm

3E15#	Dual push points actuator C260 230 V for top hung windows
3E15#	Dual push points actuator C260 230 V for bottom hung windows
3E15#	Dual push points actuator C260 230 V for swimging windows

C260 dual push points actuator (profile's length: 2510 - 3000 mm), stroke 600 mm

3E15#	Dual push points actuator C260 230 V for top hung windows
3E15#	Dual push points actuator C260 230 V for bottom hung windows
3E15#	Dual push points actuator C260 230 V for swimging windows

C260 dual push points actuator (profile's length: 3010 - 4000 mm), stroke 600 mm

3E15#	Dual push points actuator C260 230 V for top hung windows
3E15#	Dual push points actuator C260 230 V for bottom hung windows
3E15#	Dual push points actuator C260 230 V for swimging windows

Description of the standard pattern (profile's length: 1550 - 2000 mm), stroke 600 mm application on top hung windows

3E15#	Dual push points actuator C260 230 V
	Frontal bracket for top hung windows (2 pcs)
	Clamps set for top hung brackets (2 pcs)
	Hooking device to the frame for top-hung application - black (2 pcs)

Note: Part Numbers will be assigned according to the required profile's length.

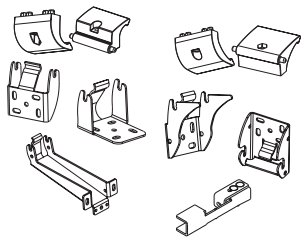

Accessories and spare parts

3A5005	Clamps for top hung windows
3A5006	Clamps for bottom hung windows
1A5822	Slim frontal bracket for top hung windows (window opening min. 400mm)
1A5801	Bracket for vertical mounting
1A5832	Bracket for bottom-hung intward opening application
1A5831	Bracket for bottom-hung outward opening application (550mm opening)
1A5800	Fallback bracket for bottom hung windows
3E3100	Hooking device to the frame for top-hung application - black

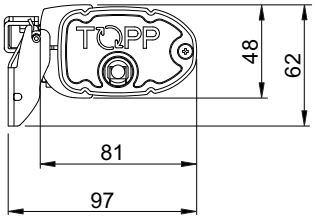

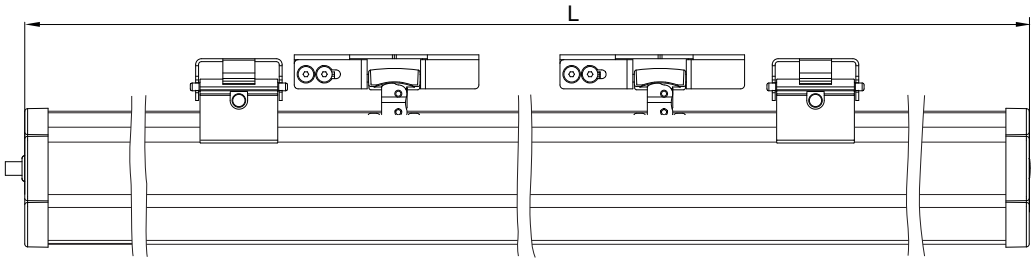

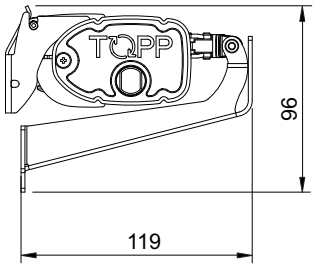

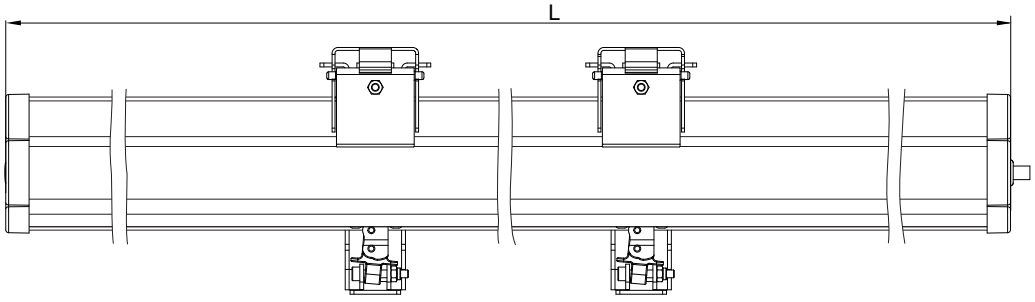

S80

Linear stem actuator
Thrust force 800N
Adjustable stroke max.1000 mm

PRODUCT DESCRIPTION

Linear electric actuator Topp model S80 with self-aligning tilting mouvement, complete with support and fitting accessory for top hung windows or sun blades and louvers. Operation at 230V 50Hz, or, as an alternative, at 24V DC. Max. traction and thrust force 800N. Preset for the synchronous operation of two actuators on the same window. Available strokes: 200 - 400 - 600 - 800 - 1000mm. Worm screw in stainless steel and IP68 protection degree for 200 and 400mm strokes. IP65 for 600, 800 and 1000mm strokes. CE marked device.







High degree of protection against dust and water IP68.



Stainless steel drive.



Millimetrically adjustable stroke.

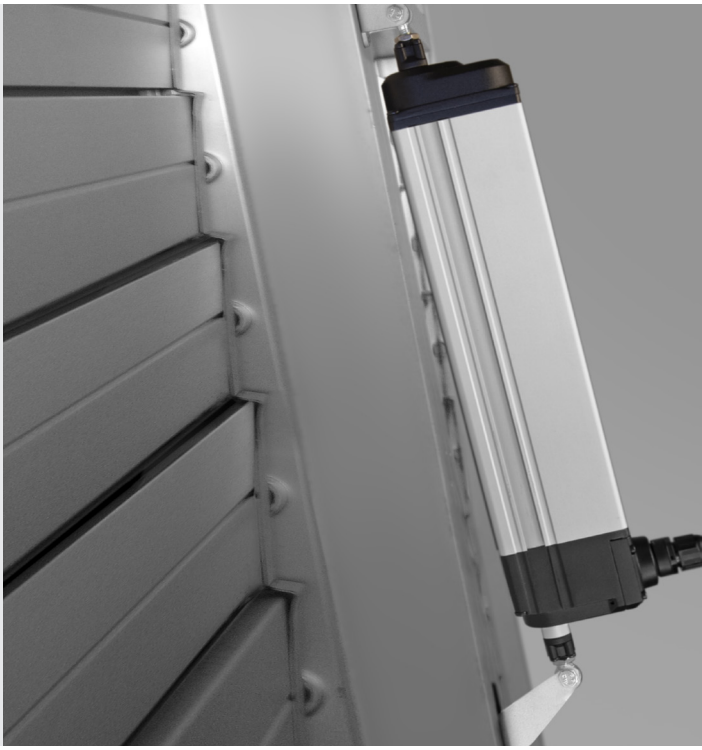

TECHNICAL SPECIFICATIONS	S80 230V	S80 24V
Power Supply voltage *	230V ~ 50Hz	24V d.c.
Maximum load applicable in thrust	800 N (600 N for louvers)	800 N (600 N for louvers)
Maximum applicable load in traction	800 N (600 N for louvers)	800 N (600 N for louvers)
Strokes	200 - 400 - 600 - 800 - 1000 mm	
Absorbed current	0,2 A	1A
Idle translation speed	6,5 mm/s	6,5 mm/s
Duration of the idle stroke	(stroke/idle translation speed)	
Double insulated	YES	YES
Service type	S2 of 3 min	S2 of 3 min
Operating temperature	-20°C + 60°C	-20°C + 60°C
Protection class	IP 68 (200-400strokes) IP65 (600-800-1000 strokes)	
Parallel connection	YES	YES
Synchronous operation of more actuators on the same window	YES	YES
Stroke end	mechanical / electronic	mechanical / electronic

* power supply cable not included

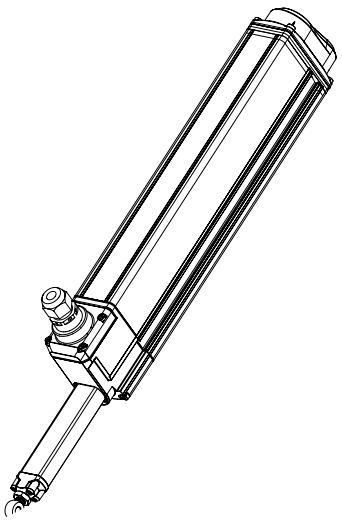

S80 standard 1 push point

3B20#	S80 linear stem actuator 230V stroke 200mm
3B20#	S80 linear stem actuator 230V stroke 200mm (louvers)
3B20#	S80 linear stem actuator 230V stroke 400mm
3B20#	S80 linear stem actuator 230V stroke 400mm (louvers)
3B20#	S80 linear stem actuator 230V stroke 600mm
3B20#	S80 linear stem actuator 230V stroke 800mm
3B20#	S80 linear stem actuator 230V stroke 1000mm
3B20#	S80 linear stem actuator 24V stroke 200mm
3B20#	S80 linear stem actuator 24V stroke 200mm (louvers)
3B20#	S80 linear stem actuator 24V stroke 400mm
3B20#	S80 linear stem actuator 24V stroke 400mm (louvers)
3B20#	S80 linear stem actuator 24V stroke 600mm
3B20#	S80 linear stem actuator 24V stroke 800mm
3B20#	S80 linear stem actuator 24V stroke 1000mm

Note: feeding cable not included
Note: specific software version for louvers application

Description of the standard 1 push point pattern for top-hung windows

3B20#	S80 linear stem actuator 230V stroke 400mm
	Actuator supporting bracket
	Standard connector
	Spare parts for top hung windows

Description of the standard 1 push point pattern for louvers

3B20#	S80 linear stem actuator 230V stroke 200mm
	Actuator supporting bracket for louvers
	Standard connector
	Spare parts for louvers

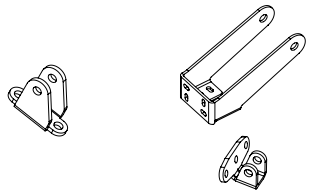

Accessories and spare parts

1B2801	Actuator supporting bracket
1B2802	Actuator supporting bracket for louvers
1S1604	Fitting bracket to the frame
3B2001	Spare parts for top hung windows
3B2002	Spare parts for louvers
1B2120	Feeding cable for synchronization (2m)
3B2010	Standard connector
3B2015	90° connector

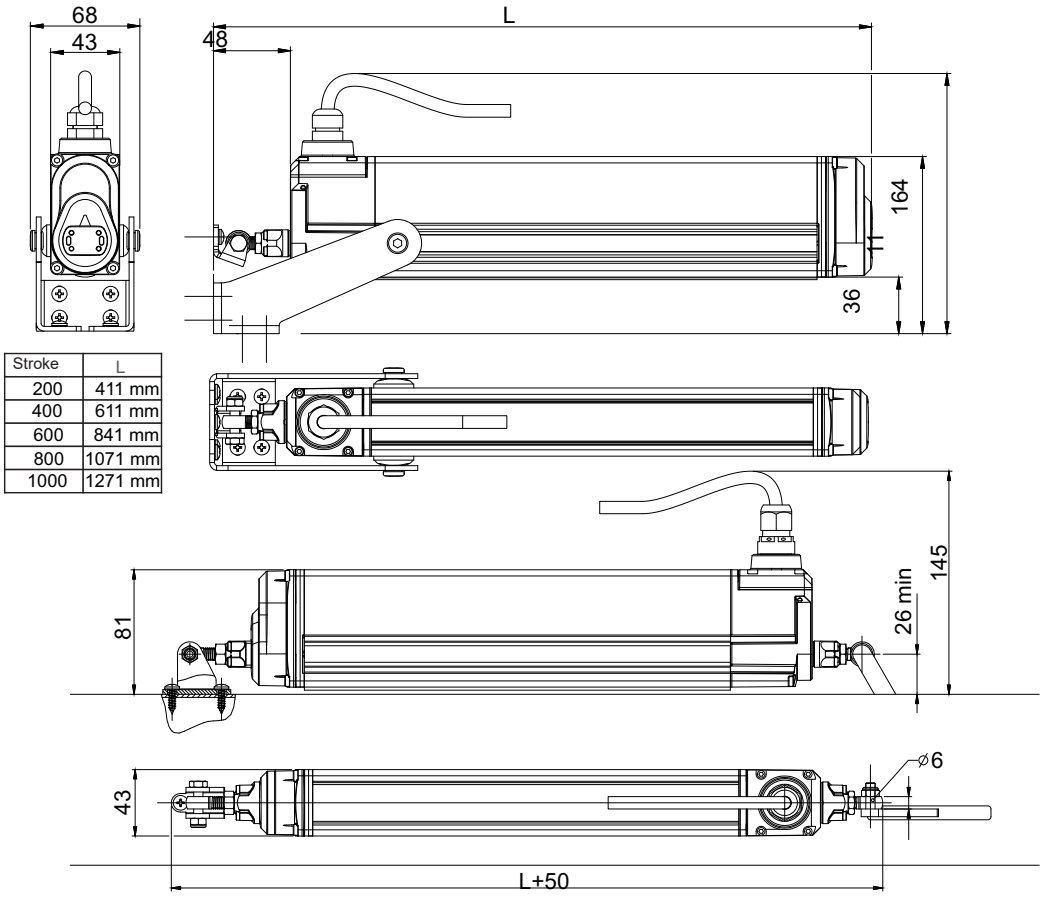

Stroke	L
200	411 mm
400	611 mm
600	841 mm
800	1071 mm
1000	1271 mm

T50

Rack actuator
Thrust force 500N
Adjustable stroke max.1000 mm

PRODUCT DESCRIPTION

Linear electrical actuator, model T50, with rack, with self-aligning swivel movement, complete with brackets and fitting accessories for top hung windows. Available at 230V 50Hz or at 24V DC. Max. applicable force 500N, max. stroke 1000mm +/- 20mm. Stroke adjustable about every 50mm by external adjusting selector. Preset for the mechanical connection of 2 or more push points by transmission rod. S version for simultaneous synchronization and operation of two actuators installed on a single window (without connecting bar) available on demand . CE marked device.





Connection of several drives by adding connecting rods and rack groups for the installation in large windows.



Fast installation without the need of power, thanks to the self-aligning sliding bracket with easy adjustment in 2mm steps along the body of the actuator.

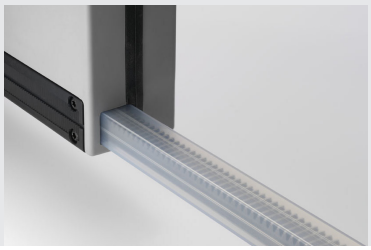

High protection IP 55 rated.



TECHNICAL SPECIFICATIONS	T50 230V	T50 24V
Power supply voltage	230V ~ 50Hz	24 V d.c.
Max. applicable load	500 N	
2 push points (1 master + 1 slave)	500 N	
2 push points (1 master + 1 master)	700 N (800N Sync version)	
3 push points (1 master + 2 slave)*	450 N	
Distance between 2 push points	max 2,4m - min 1m (1,5m between 2 masters)	
Available strokes (+/- 20mm) T50 mod. 320	150 - 200 - 250 - 320 mm	
Available strokes (+/- 20mm) T50 mod. 500	150 - 200 - 250 - 320 - 400 - 450 - 500 mm	
Available strokes (+/- 20mm) T50 mod. 750	180 - 280 - 370 - 470 - 560 - 650 - 750 mm	
Available strokes (+/- 20mm) T50 mod. 1000	Millimetrically adjustable on demand	
Absorbed current at max. load	0,3 A	1,4 A
Idle translation speed	18 mm/s	10 mm/s
Duration of the idle stroke	(stroke/idle translation speed)	
Double insulated	YES	-
Service type	S2 of 4 min	
Operating temperature	- 5°C +55°C	
Protection class	IP 55	
Parallel connection option	YES	
Stroke end	encoder	

* Operation up to 6 drives on the same window frame is possible by transmission rod. Ask our technical dept. for the placement of the pushing points and the calculation of the thrust force.

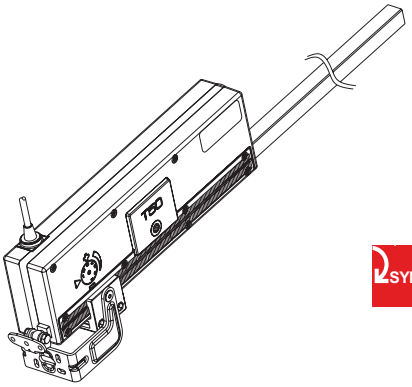

T50 Actuator Kit (master)

3C20001	T50 Rack actuator 230V stroke 320 mm (adjustable)
3C20002	T50 Rack actuator 230V stroke 500 mm (adjustable)
3C20013	T50 Rack actuator 230V stroke 750 mm (adjustable)
3C22004	T50S Rack actuator 230V stroke 1000 mm (adjustable) *
3C20003	T50 Rack actuator 24V stroke 320 mm (adjustable)
3C20004	T50 Rack actuator 24V stroke 500 mm (adjustable)
3C20014	T50 Rack actuator 24V stroke 750 mm (adjustable)
3C22008	T50S Rack actuator 24V stroke 1000 mm (adjustable) *

SYNC

* T50S with stroke 1000mm is equipped with electronic board for the synchronized operation of 2 actuators on the same window. Thrust force 400N.

T50S version for the synchronous operation of two T50on the same window frame without connection rod available upon request.

TANDEM

T50 Rack assembly kit (slave)

3C2100	T50 Rack assembly stroke 320 mm (connection and fitting accessories included)
3C2101	T50 Rack assembly stroke 500 mm (connection and fitting accessories included)
3C2104	T50 Rack assembly stroke 750 mm (connection and fitting accessories included)
3C2105	T50 Rack assembly stroke 1000mm (connection and fitting accessories included)

T50 connection rod

1C2505	T50 connecting rod - Length 1500 mm (interaxis max. 1400 mm)
1C2509	T50 connecting rod - Length 3000 mm (interaxis max. 2400 mm)

Description of the standard pattern for 2 push points

3C20001	T50 Rack actuator 230V stroke 320 mm (adjustable)
3C2100	T50 Rack assembly stroke 320 mm
1C2505	T50 connecting rod - Length 1500 mm

Description of the standard pattern for 3 push points

3C20001	T50 Rack actuator 230V stroke 320 mm (adjustable)
3C2100	T50 Rack assembly stroke 320 mm
3C2100	T50 Rack assembly stroke 320 mm
1C2509	T50 connecting rod - Length 3000 mm

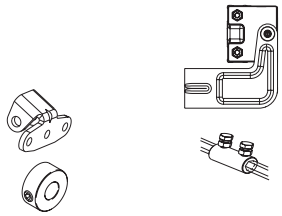

Accessories and spare parts

8C0016	CC1 control unit for simultaneous stop max 3 T50 230V stroke 320mm
3C2010	Actuator support brackets
3C2001	Spare parts and sash bracket
1C2804	Junction ring between the connecting rods for 3 push point
0A0483	Connecting rod stop

	A
T50 320 mm	576.5 mm
T50 500 mm	746.5 mm
T50 750 mm	983.5 mm
T50 1000 mm	1246.5 mm

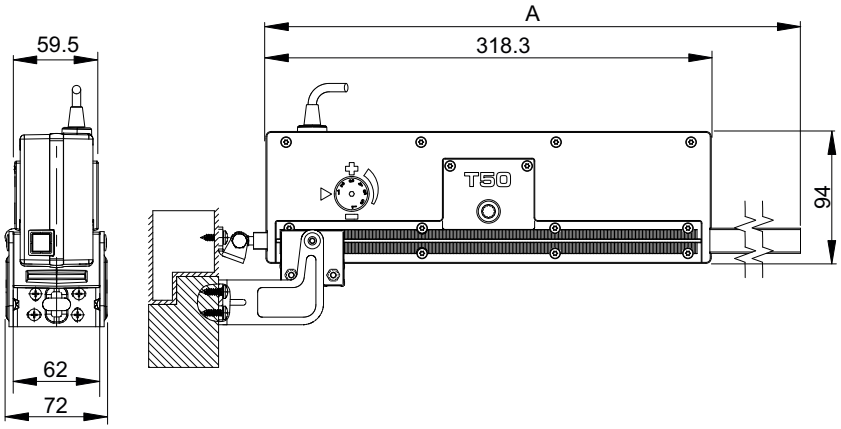

TF23R TF33R TF24R TF44R RR MEM/AL RW RDC TR8 TR4

Control and power units
Detectors and remote controls



PRODUCT DESCRIPTION

TF33R - Control and feeding unit with 2 outputs at 24V and 1 output at 230V, max. 1,5A each. Provided with remote control receiver, either at 433,92 MHz or infra-red. Input for one RW wind sensor with adjustable speed threshold via trimmer. Possibility to operate two RDC 12V rain sensors simultaneously. A blue LED indicates the control unit and the remote control status. All functions (rain sensor exclusion, manual operation, thermostat connection, etc.) can be set out via dipswitch.
CE marked device.

TF23R_TF24R_TF44R_RR - The TF23R, TF24R, TF44R and RR control units feed and control 24V or 230V TOPP actuators. Built-in radio receiver at 433,92 MHz. Pre-set for RW wind sensor and RDC 12V rain sensor.
CE marked device.

MEM/AL - Power supply system for connecting 24V actuators, max 16A, to an existing detection control unit. In the temporary absence of main voltage, the MEM/AL module guarantees, by the use of back-up batteries (to be requested separately) a limited number of activations of the actuators connected to it. The existing detection control unit must be equipped with a 24V dc alarm signal or, alternatively, a N.O. contact. The MEM/AL module is designed to be connected to a double N.O. switch to control the actuators as well for ventilation (limited number of daily operations) or for closing the windows in the event of an opening command from the existing control unit. CE marked.

TECHNICAL SPECIFICATIONS	TF23R_TF33R	TF24R	TF44R	RR
Power supply voltage	230 V~50 Hz.			
Output voltage	24 V - 230 V	24 V c.c.	230 V~50 Hz.	230 V~50 Hz.
Max power consumption	32 W	62 W	300 W	300 W
Max absorbed current	0,5 A	1,35 A	1,3 A	1,3 A
Service type	S1 – continuous			depending on the connected motors
Pre-set for	wind sensor, rain detector, push button			rain detector or cabled push button
Operating temperature	- 5 + 50 °C			
Dimensions	150x80x55 mm 150x80x28 mm	160x120x75 mm	160x120x75 mm	87x53x32 mm
Connectable C20 actuators	3	2 (4*)	6 (16*)	6
Connectable C20 tandem actuators-	-	1 (4*)	4 (8*)	3
Connectable C30 actuators	-	1 (4*)	4 (16*)	4
Connectable C40 actuators	-	1 (4*)	5 (20*)	5
Connectable C50 actuators	-	1 (4* **)	4 (16* **)	4
Connectable C60 actuators	3	2	6	6
Connectable ACK4 actuators	-	-	4 (16*)	4
Connectable C130 actuators	3	2 (8*)	6 (16*)	6
Connectable C160 actuators	-	2	6	6
Connectable C240 actuators	-	1 (4*)	4 (8*)	3
Connectable C260 actuators	-	-	4 (16*)	3
Connectable S80 actuators	-	1 (4* ***)	4 (16* ***)	4
Connectable T50 actuators	-	1	4 (16*)	4

* Motors must be equally located on the four feeding unit outputs, which implies a 1 minute delay between 2 consecutive commands.
** Max. 800 mm stroke. *** Max. 400 mm stroke.

TECHNICAL SPECIFICATIONS	MEM/AL
Power supply voltage	230 V~50 Hz.
Output voltage	24 V
Max power consumption	0,30W
Max absorbed current	16 A
Service type	S1 – continuous
Operating temperature	-5 °C +50 °C
Dimensions	234x315x190 mm
Connectable C20 actuators	30
Connectable C20 tandem actuators	15
Connectable C30 actuators	12
Connectable C40 actuators	12
Connectable C50 actuators	11
Connectable C60 actuators	26
Connectable ACK4 actuators	10
Connectable C130 actuators	30
Connectable C160 actuators	15
Connectable C240 actuators	15
Connectable S80 actuators	12
Connectable T50 actuators	10
Connectable A90 actuators	11

Control and power units for actuators at 230V and 24V

8C0070	TF23R Control and power pack, 3 outputs for 24V DC actuators, with 433 MHz on-board receiver and infra-red LED for remote control. Box for wall fixing with sliding opening to programm the remote control and the emergency closure. Can be paired with TR8 remote control.
8C0071	TF33R Control and power pack, 2 outputs for 24V DC actuators and 1 output for 230V DC actuators , with 433 MHz on-board receiver and infra-red LED for remote control. Box for wall fixing with sliding opening to programm remote control and emergency closure. Can be paired with TR8 remote control.
8C0072	TF33R Control and power pack, 2 exits at 24V and 1 exit at 24V with adjustable power, with 433 MHz remote control receiver and infra-red LED. Box for wall fixing with sliding opening to programm remote control and emergency closure. Can be paired with TR8 remote control.
8C0054	TF24R Control and power unit 24V (4 outputs) with 433MHz receiver. Can be paired with TR8 remote control.
8C0066	TF44R Control and power unit 230V (4 outputs) with 433MHz receiver. Can be paired with TR8 remote control.
8C0123	RR Control and feeding unit 230V (1 outputs) with 433 MHz on-board receiver. Can be paired with TR4 and TR8 remote controls.
8C0016	CC1 control unit for simultaneous stop max 3 T50 230V stroke 320 mm
8D0008	AL/TF power pack 230/24V (for TF24R) battery backup not included
8K0001	Battery set for AL/TF and MEM/AL feeder units (2x12V 7Ah)
8D0004	AL2/SW electronic feeder board for 24V DC actuators, (max.1,6A)
8C0091	MEM/AL Expanding module for 24V motors (max.16A)
8C0090	MEM module for local operation
8E0030	RW wind sensor
8E0054	RDC/12 12V Rain sensor, incl. roof fixing adhesive tape
0B0020	Special adjustable bracket for RDC/12 roof installation
8E0314	TR8 8 chanels remote control with wall mount holder
8E0330	TR4 4 chanels remote control (for RR control unit)

WiFi Box

WiFi devices
for window actuators control
via smartphones and tablets

ShutterBox



WiFi device for the control of 230V window actuators via smartphone or tablet.

RwBox



WiFi device for the connection to wind and rain sensors and control of window actuators connected to the WiFi.

µRemotePro



Remote control with rechargeable batteries for the control of window actuators connected to the WiFi.

InBox



WiFi switches connection for the control of window actuators connected to the WiFi.

TempSensor



WiFi detector, equipped with waterproof measurement probe, for temperature indication and control of window actuators connected to the WiFi, based on detection and temperature changes.

AirSensor



WiFi detector for measuring the presence of polluting dust and display via smartphone or tablet with control of window actuators connected to the WiFi.

Compatible with IOS, Android, Alexa and Google assistant

alexa

Google Assistant

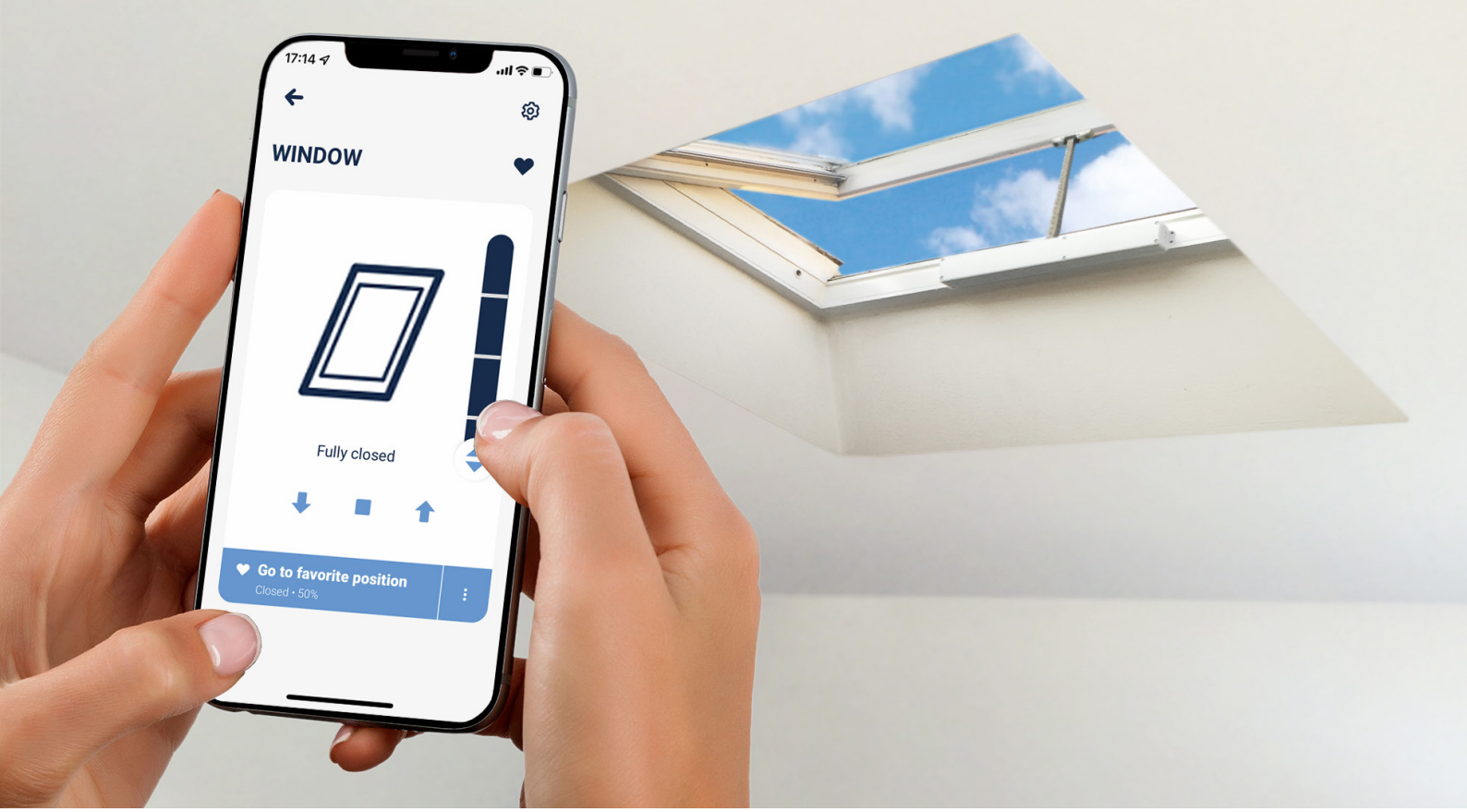

WiFi devices for the control of window actuators via smartphones and tablets

8C0470	ShutterBox WiFi device for the control of 230V window actuators via smartphone or tablet.
8C0472	RwBox WiFi device for the connection to wind or rain sensors and control of window actuators connected to the WiFi.
8C0480	µRemotePro remote control with rechargeable batteries for the control of window actuators connected to the WiFi.
8C0485	InBox WiFi switches connection for the control of window actuators connected to the WiFi.
8C0474	TempSensor WiFi detector, equipped with waterproof measurement probe, for temperature indication and control of window actuators connected to the WiFi, based on detection and temperature changes.
8C0475	AirSensor WiFi detector for measuring the presence of polluting dust and display via smartphone or tablet.

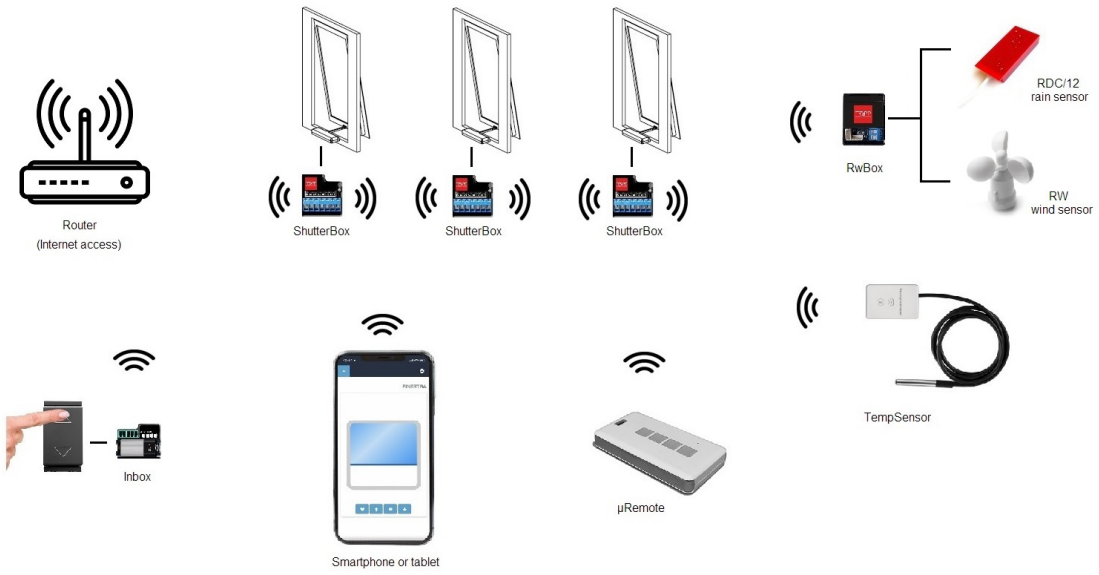





C50 RWA

Chain actuator thrust force 500N
Stroke 600mm - 800mm - 1000mm



PRODUCT DESCRIPTION

TOPP electric actuator model C50 RWA with double-link chain, in an aluminium profile, available with brackets and accessories for skylights, bottom hung or top hung windows. Operation at 24V DC. Max. thrust force 500N. Stroke 600 - 800 - 1000 mm. Patented chain terminal, attachment to the frame and chain load adjustment to ensure maximum resistance to high loads with long strokes. Pre-set for the synchronous operation of two actuators on the same window.
CE marked device, 600mm and 800mm strokes tested in accordance with the EN12101-2 Standard for smoke ventilation applications.





Double-link chain and die-cast aluminum gearbox with shaft supported by ball bearings for higher resistance to heavy loads.



Patented chain load adjustment system to allow the maximum resistance to high loads with long strokes.

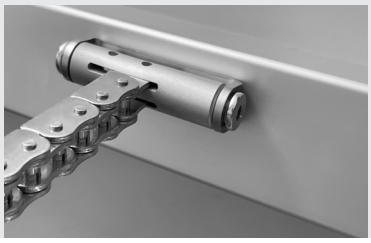

Patented chain terminal with double lateral fixing and swivelling range of two degrees to ensure a greater resistance to heavy loads.



TECHNICAL SPECIFICATIONS	C50 RWA stroke 600 mm			C50 RWA stroke 800 mm		C50 stroke 1000 mm
	Top hung	Bottom hung	Skylight	Top hung	Bottom hung	Bottom hung
Power voltage	24V d.c.			24V d.c.		24V d.c.
Max applicable load in thrust	500 N			300 N		-
Max applicable load in traction	500 N			500 N		500 N
Stroke (+/-20mm)	600 mm			800 mm		1000 mm
Absorbed current	1A			1 A		1 A
Idle translation speed opening	10,3 mm/s			12.7 mm/s	13.3 mm/s	13.2 mm/s
Idle translation speed closing	10.3 mm/s			8 mm/s	8 mm/s	8 mm/s
Duration of the idle stroke*	60 s			63 s	60 s	75 s
Service type	S2 of 4 min			S2 of 4 min		S2 of 4 min
Operating temperature	-5°C + 50°C			-5°C + 50°C		-5°C +50°C
Protection Class	IP 30			IP 30		IP 30
Synchronous operation of 2 actuators on the same window	YES			YES		YES
Parallel connection option	YES			YES		YES
Overlap from 0 to 50 mm with self-learning	YES			YES		YES
Dimensions	811 x 43 x 55 mm			911 x 43 x 55 mm		1011 x 43 x 55 mm

* For RWA application: required max opening time 60s.



C50 chain actuator with accessories for application on top hung windows

3E41#	C50 RWA chain actuator 24V 600mm stroke for top hung windows
3E41#	C50 RWA chain actuator 24V 800mm stroke for top hung windows

C50 chain actuator with accessories for application on bottom hung outward opening windows

3E41#	C50 RWA chain actuator 24V 600mm stroke for bottom hung outward opening
3E41#	C50 RWA chain actuator 24V 800mm stroke for bottom hung outward opening
3E41#	C50 chain actuator 24V 1000mm stroke for bottom hung outward opening

C50 chain actuator with accessories for application on bottom hung inward opening windows

3E41#	C50 RWA chain actuator 24V 600mm stroke for bottom hung inward opening
3E41#	C50 RWA chain actuator 24V 800mm stroke for bottom hung inward opening
3E41#	C50 chain actuator 24V 1000mm stroke for bottom hung inward opening

Description of the standard pattern for 1 push point application on top hung windows

3E41#	C50 RWA chain actuator 24V 600mm stroke
	Brackets for top/bottom hung outward opening
	Hooking device for top and bottom hung outwards opening
	Standard spare parts

Description of the standard pattern for 2 push points application on top hung windows

3E41#	C50 RWA chain actuator 24V 600mm stroke
3E41#	C50 RWA chain actuator 24V 600mm stroke

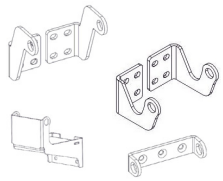

Accessories and spare parts

3E4100	Brackets for top-hung/bottom-hung outward opening
3E4101	Brackets for bottom-hung inward opening or vertical mounting
1E4604	Upper bracket for bottom hung windows
1E4820	Hooking device for top-hung and bottom hung outwards opening
3E4001	Standard spare parts

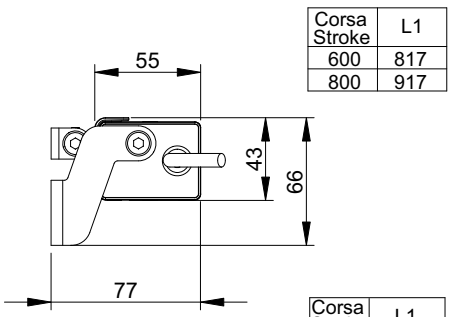

Corsa Stroke	L1
600	817
800	917

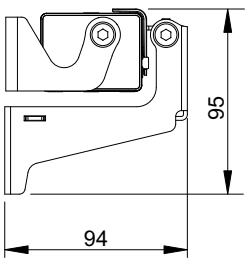

Corsa Stroke	L1
600	817
800	917
1000	1017

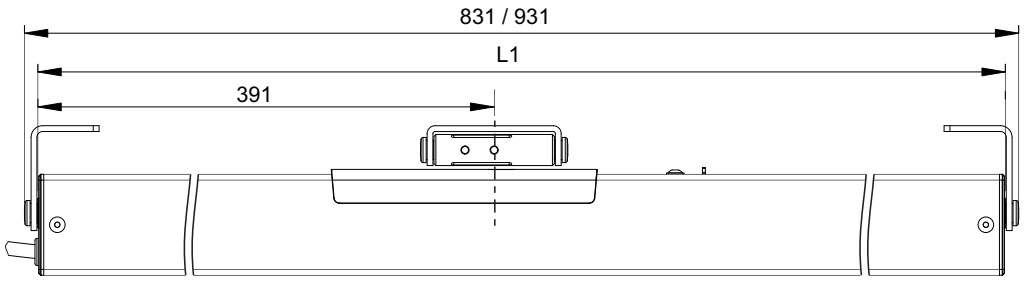

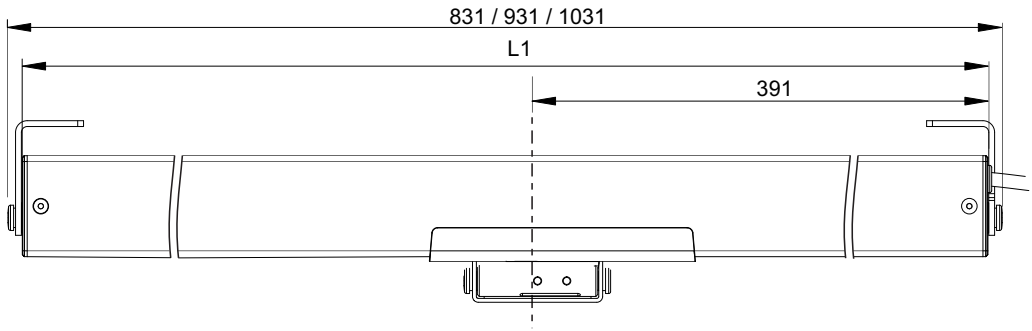

ACK4 RWA

Chain actuator thrust force 300 N
Adjustable stroke max.400 mm

PRODUCT DESCRIPTION

Electric actuator Topp model ACK4 with a double link articulated stainless steel chain, enclosed in a special diecast aluminum casing, painted with epoxy powders, complete with brackets and accessories for bottom hung windows outward opening for smoke evacuation application. Operation at 24V DC Max. traction and thrust force 300N. End of stroke adjustable at 100, 150, 200, 205, 300, 350, 400 mm by an external knob located on both sides of the actuator. Electronic device with acoustic warning to signal erroneous installation (buzzer) Upon request, a preset “S” version for the synchronous operation of two actuators on the same window is available. High protection IP 55 rated. Available IP66 version (fixed stroke). CE marked device, tested in accordance with the EN12101-2 Standard for smoke ventilation applications.





Easy stroke adjustment with 7 positions from 100 to 400mm.
(International patent)



Double link articulated stainless steel chain.

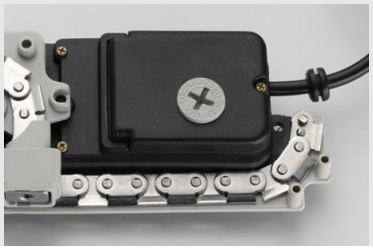

High protection IP 55 rated.
(available special IP66 version)



TECHNICAL SPECIFICATIONS	ACK4 RWA
Power supply voltage	24V d.c.
Maximum applicable load in thrust	300 N
Maximum applicable load in traction	300 N
Strokes	100 - 150 - 200 - 250 - 300 - 350 - 400 mm
Absorbed current	1,35 A
Idle translation speed	17 mm/s
Duration of the idle stroke	23 s
Double insulated	YES
Service Type	S2 of 3 min
Operating temperature	- 5°C + 50°C
Protection Class	IP 55 (available special IP66 version)
Adjustment of the window frame hooking system	10 mm
Parallel connection option	YES
Synchronous operation of more actuators on the same window	with S version
Chain position control	YES
Stroke end	encoder
Acoustic device that warns of any eventual incorrect installations (buzzer)	YES
Dimensions	288 x 48 x 83 mm
Weight	1,9 kg

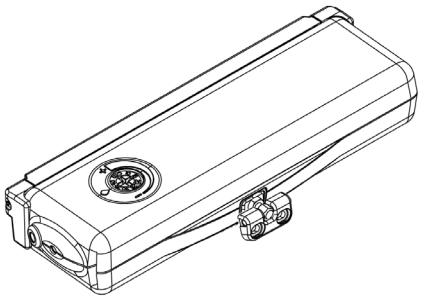

ACK4 RWA version 1 push point

3A11#	ACK4 RWA chain actuator 24V RWA version - black RAL 9005 bottom-hung outwards opening application (without fallback bracket)
3A11#	ACK4 RWA chain actuator 24V RWA version - silver RAL 9006 bottom-hung outwards opening application (without fallback bracket)
3A11#	ACK4 RWAchain actuator 24V RWA version - white Euro-White bottom-hung outwards opening application (without fallback bracket)

2SYNC ACK4S version RWA for the synchronous operation of two ACK4 RWAon the same window frame available upon request.

IP66 ACK4 IP66 version RWA (fixed stroke) available upon request.

CS1 chain anti-closing accessory for top-hung application available upon request.

Description for 1 push point solution for bottom-hung outward opening application

3A11#	ACK4 RWA chain actuator 24 V
	Frontal bracket for top/bottom hung windows (outwards opening)
	Hooking device to the frame and spare parts

Description for 2 push points solution for bottom-hung outward opening application

3A13#	ACK4S 24V RWA actuator (silicon red cable)
3A13#	ACK4S 24V RWA actuator (silicon red cable)

Accessories and spare parts

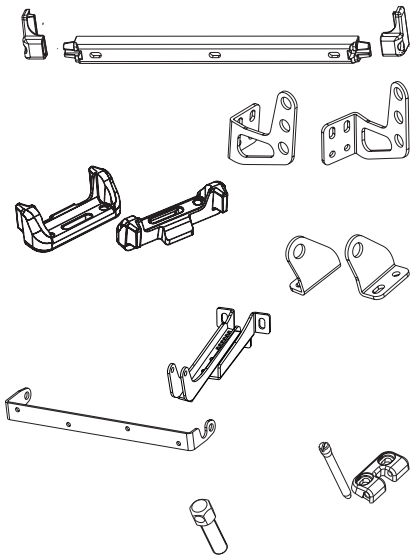

3A1360	Frontal bracket for top/bottom hung windows - black
3A1362	Frontal bracket for top/bottom hung windows - silver
3A1361	Frontal bracket for top/bottom hung windows - white
3A1391	Large swivel brackets set frontal mounting - black
3A1393	Large swivel brackets set frontal mounting - silver
3A1392	Large swivel brackets set frontal mounting - white
3A1380	Fixed vertical mounting brackets set - black
3A1382	Fixed vertical mounting brackets set - silver
3A1381	Fixed vertical mounting brackets set - white
3A1396	Small vertical mounting brackets set - black
3A1398	Small vertical mounting brackets set - silver
3A1397	Small vertical mounting brackets set - white
3A1356	Upper bracket for bottom hung windows (RWA version) - black
3A1375	Single swivel bracket for bottom hung windows - black
3A1377	Single swivel bracket for bottom hung windows - silver
3A1376	Single swivel bracket for bottom hung windows - white
3A1001	Hooking device to the frame with pin and spare parts
0B0005	Extension pin h 37,5 (overlap 10-20mm)
0B0007	Extension pin h 47,5 (overlap 20-30mm)
0B0006	Extension pin h 57,5 (overlap 30-40mm)

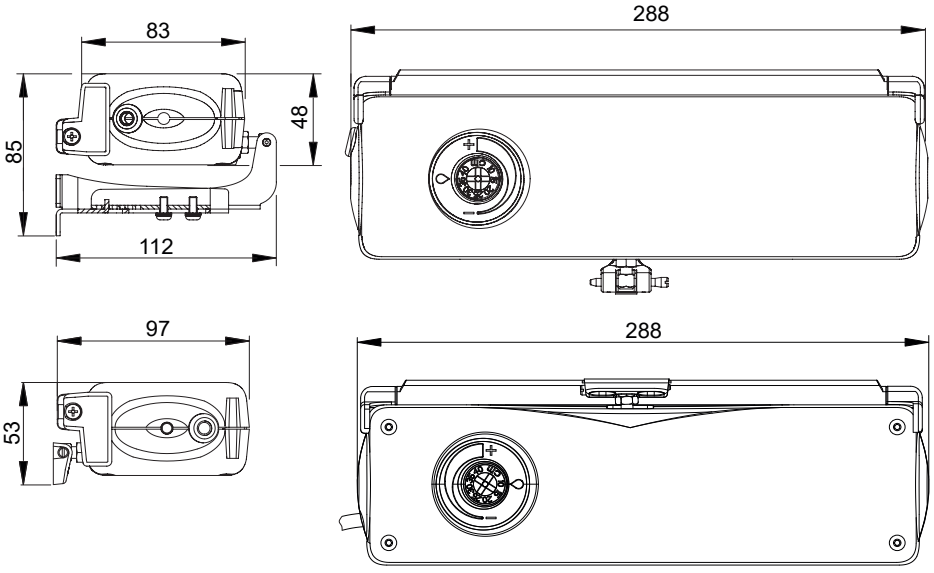

C160 RWA

Chain actuator
Thrust force 300N
Stroke 360mm - 600mm - 1000mm



PRODUCT DESCRIPTION

Electric actuator Topp model C160 RWA with double-link chain, in an elegant die-cast aluminium profile, complete with brackets and accessories for bottom hung windows outward opening for smoke evacuation application. Operation at 24V DC. Max. thrust force 300N. Stroke 360 - 600 - 1000 mm. Electronic end of stroke in closing by current absorption control.
CE marked device, tested in accordance with the EN12101-2 Standard for smoke ventilation applications (360mm and 600mm strokes).



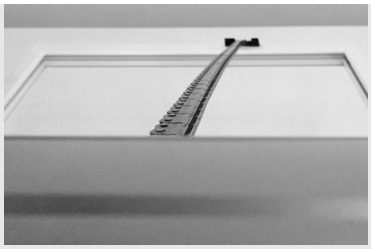

Elegant and attractive aluminium profile with swivel brackets for large openings.

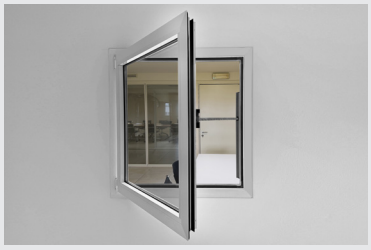

Available also for installation on side hung windows.

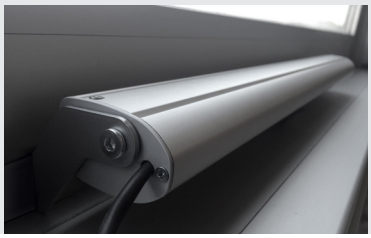

Long chain up to 1 meter enclosed in a slim housing.



TECHNICAL SPECIFICATIONS	C160 RWA stroke 360 mm	C160 RWA stroke 600 mm	C160 stroke 1000 mm
Power voltage	24V d.c.	24V d.c.	24V d.c.
Max applicable load in thrust	300 N	250 N	50 N
Max applicable load in traction	200 N	200 N	200 N
Stroke for top-hung application	360 mm	600 mm	1000 mm
Stroke for bottom-hung application	322 mm	562 mm	962 mm
Absorbed current	0,43 A	0,60 A	0,60 A
Idle translation speed	7,5 mm/s	10 mm/s	10 mm/s
Duration of the idle stroke *	48 s	60 s	100 s
Service type	S2 of 4 min	S2 of 4 min	S2 of 4 min
Operating temperature	-15°C + 50°C	-15°C + 50°C	-15°C + 50°C
Protection Class	IP 30	IP 30	IP 30
Stroke end regulation in closure	not necessary	not necessary	not necessary
Parallel connection option	YES	YES	YES
Possibility of installing double push point on the same window	YES	NO	NO
Stroke end	Electronic in opening, by amperometric absorption in closing		

* For RWA application: max opening time required 60s.

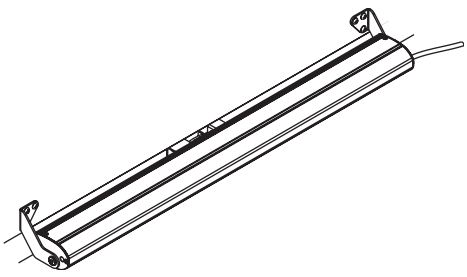

C160 RWA 1 push point

3E22#	C160 chain actuator 24V stroke 360mm bottom-hung outward opening
3E22#	C160 chain actuator 24V stroke 360mm bottom-hung inward opening
3E22#	C160 chain actuator 24V stroke 360mm top-hung application*
3E22#	C160 chain actuator 24V stroke 360mm outward swinging application
3E22#	C160 chain actuator 24V stroke 360mm inward swinging application
3E21#	C160 chain actuator 24V stroke 600mm bottom-hung outward opening
3E21#	C160 chain actuator 24V stroke 600mm bottom-hung inward opening
3E21#	C160 chain actuator 24V stroke 600mm top-hung application*
3E21#	C160 chain actuator 24V stroke 600mm outward swinging application
3E21#	C160 chain actuator 24V stroke 600mm inward swinging application
3E23#	C160 chain actuator 24V stroke 1000mm bottom-hung outward opening
3E23#	C160 chain actuator 24V stroke 1000mm bottom-hung inward opening
3E23#	C160 chain actuator 24V stroke 1000mm outward swinging application
3E23#	C160 chain actuator 24V stroke 1000mm inward swinging application

*CS1 chain anti-closing accessory for top-hung application included.

Description of the standard pattern, 1 push point
Application bottom hung windows outward opening

3E21#	C160 chain actuator 24V stroke 600mm
	Iron hooking device for top-hung and bottom hung (outwards opening) for C160 600/1000 mm stroke
	Couple of swivel frontal brackets C160

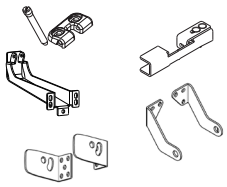

Accessories and spare parts

3E2012	Hooking device for top-hung and bottom hung (outwards opening) for C160 360 stroke
3E3100	Iron hooking device for top-hung and bottom hung (outwards opening) for C160 600/1000 stroke
1E2804	C160 bottom-hung bracket for single push point
3E2100	Brackets for top-hung/bottom-hung outwards opening application
3E2101	Brackets for bottom-hung fallback application

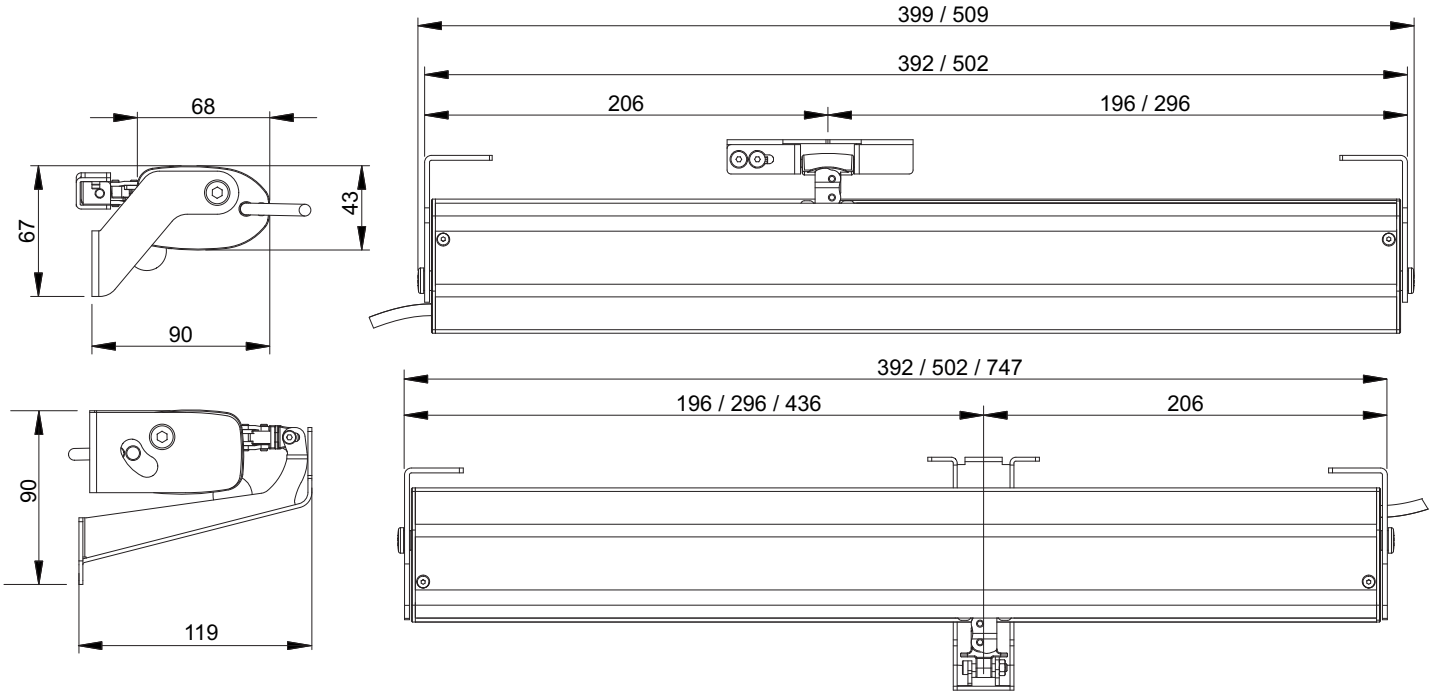

C160 RWA DOUBLE CHAIN

Dual push points chain actuator
Thrust force max. 600N
Stroke 360mm - 600mm



PRODUCT DESCRIPTION

Electric actuator Topp model C160 RWA with 2 double-link chains, in an elegant die-cast aluminium profile, complete with brackets and accessories for bottom hung windows outward opening for smoke evacuation application. Operation at 24V DC. Max. thrust force 300N. Stroke 360 - 600 mm. Electronic end of stroke in closing by current absorption control.
CE marked device, tested in accordance with the EN12101-2 Standard for smoke ventilation applications.





Tailored profile lengths according to the window frame width.
(International patent)



Special hooking of chain to window to guarantee very high resistance with a long stroke even on top hung windows.



Innovatory and original design.



TECHNICAL SPECIFICATIONS	C160 RWA double chain stroke 360 mm	C160 RWA double chain stroke 600 mm
Power supply voltage	24V d.c.	24V d.c.
Max applicable load in thrust	400N	600N
Max applicable load in traction	300N	600N
Stroke	360mm	600mm
Absorbed current	0,75A	2,10A
Idle translation speed	7,5 mm/sec	13 mm/sec
Duration of the idle stroke	48s	45s
Service type	S2 of 4min	S2 of 4min
Operating temperature	-15°C + 50°C	-15° + 50°C
Protection Class	IP30	IP30
Stroke end regulation in closure	not necessary	not necessary
Parallel connection option	YES	YES
Stroke end	Electronic in opening, by amperometric absorption in closing	



	Stroke 360mm 3E12#	Stroke 600mm 3E11#
C160 RWA dual push point (from 1200mm to 1500mm)		
C160 24V RWA dual push point for bottom-hung (outwards opening)	3E12#	
C160 24V RWA dual push point for bottom-hung (inwards opening)	3E12#	
C160 24V RWA dual push point for top-hung application*	3E12#	
C160 24V RWA dual push point for outward swinging application	3E12#	
C160 24V RWA dual push point for inward swinging application	3E12#	
C160 RWA dual push point (from 1510mm to 2000mm)		
C160 24V RWA dual push point for bottom-hung (outwards opening)	3E12#	3E11#
C160 24V RWA dual push point for bottom-hung (inwards opening)	3E12#	3E11#
C160 24V RWA dual push point for top-hung application*	3E12#	3E11#
C160 24V RWA dual push point for outward swinging application	3E12#	3E11#
C160 24V RWA dual push point for inward swinging application	3E12#	3E11#
C160 RWA dual push point (from 2010mm to 2500mm)		
C160 24V RWA dual push point for bottom-hung (outwards opening)	3E12#	3E11#
C160 24V RWA dual push point for bottom-hung (inwards opening)	3E12#	3E11#
C160 24V RWA dual push point for top-hung application*	3E12#	3E11#
C160 24V RWA dual push point for outward swinging application	3E12#	3E11#
C160 24V RWA dual push point for inward swinging application	3E12#	3E11#
C160 RWA dual push point (from 2510mm to 3000mm)		
C160 24V RWA dual push point for bottom-hung (outwards opening)	3E12#	3E11#
C160 24V RWA dual push point for bottom-hung (inwards opening)	3E12#	3E11#
C160 24V RWA dual push point for top-hung application*	3E12#	3E11#
C160 24V RWA dual push point for outward swinging application	3E12#	3E11#
C160 24V RWA dual push point for inward swinging application	3E12#	3E11#
C160 RWA dual push point (from 3010mm to 4000mm)		
C160 24V RWA dual push point for bottom-hung (outwards opening)	3E12#	3E11#
C160 24V RWA dual push point for bottom-hung (inwards opening)	3E12#	3E11#
C160 24V RWA dual push point for top-hung application*	3E12#	3E11#
C160 24V RWA dual push point for outward swinging application	3E12#	3E11#
C160 24V RWA dual push point for inward swinging application	3E12#	3E11#

*CS1 chain anti-closing accessories for top-hung application (2pcs) included.

Description for dual push point solution bottom-hung outward opening application (from 1510mm to 2000mm)

3E11#	C160 24V RWA dual push point chain actuator stroke 600mm
	Bracket for bottom-hung outward opening application (window opening min 1500mm) for C160 dual push point (2pz)
	Clamps for top hung and bottom hung outwards opening windows for C160 dual push point (2pz)
	Iron hooking device for top/bottom hung outwards opening for C160 stroke 600 and 1000 mm (2pz)

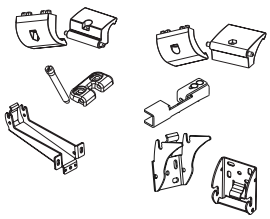

Accessories and spare parts

3A5005	Clamps for top hung and bottom hung outwards opening windows
3A5006	Clamps for bottom hung windows
3A5051	Hooking device for top/bottom hung (outwards opening) for C160 RWA double chain stroke 360mm
3E3100	Iron hooking device for top-hung and bottom hung outwards opening for C160 stroke 600 mm
1A5800	Bottom-hung bracket
1A5832	Bracket for bottom hung application for C160 dual push point
1A5831	Bracket for bottom-hung outward opening application for C160 dual push point

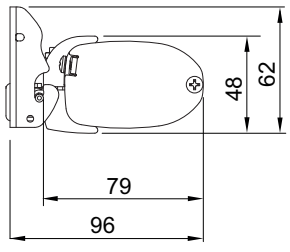

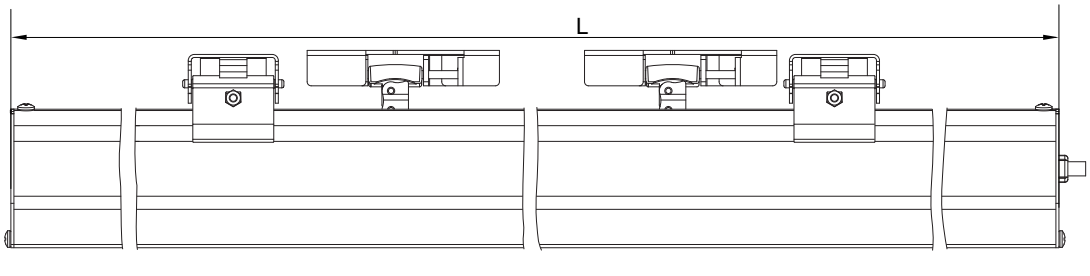

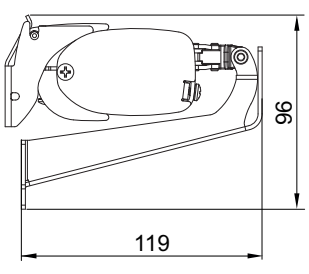

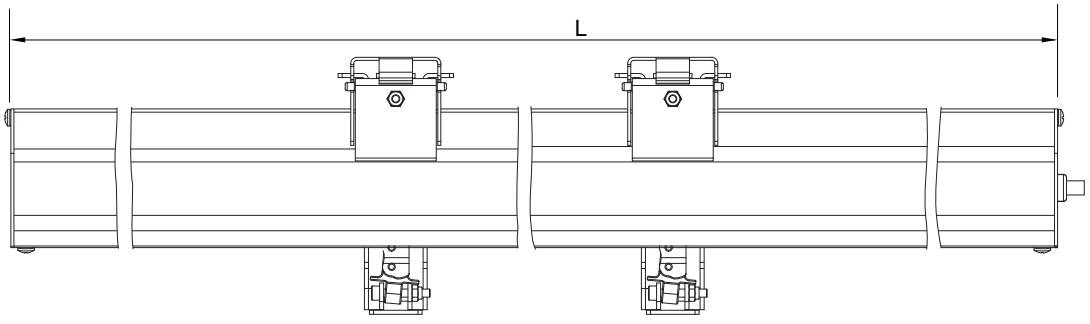

S80 RWA

Linear stem actuator
Thrust force 800N
Adjustable stroke max.400 mm

PRODUCT DESCRIPTION

Linear electric actuator Topp model S80 with self-aligning tilting mouvement, complete with support and fitting accessory for top hung windows or sun blades and louvers. Operation at 24V DC. Max. traction and thrust force 800N. Preset for the synchronous operation of two actuators on the same window. Available strokes: 200 - 400 mm. IP65 protection degree. CE marked device, tested in accordance with the EN12101-2 Standard for smoke ventilation applications.







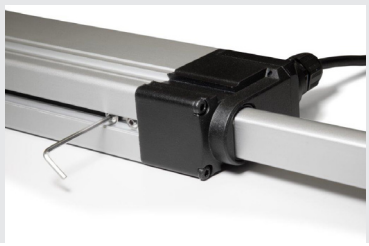

High degree of protection against dust and water IP65.

Stem highly resistant to heavy loads.

Millimetrically adjustable stroke.



TECHNICAL SPECIFICATIONS	S80 RWA
Power Supply voltage *	24V d.c.
Maximum load applicable in thrust	800 N (600 N for louvers)
Maximum applicable load in traction	800 N (600 N for louvers)
Strokes	200 - 400 mm
Absorbed current	1A
Idle translation speed	6,5 mm/s
Duration of the idle stroke	(stroke/idle translation speed)
Double insulated	YES
Service type	S2 of 3 min
Operating temperature	-20°C + 60°C
Protection class	IP 65
Parallel connection	YES
Synchronous operation of more actuators on the same window	YES
Stroke end	mechanical / electronic

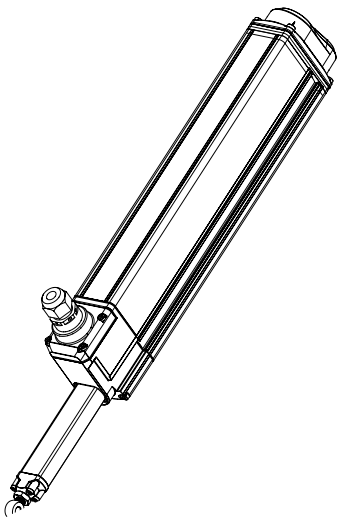

S80 standard 1 push point

3B20020	S80 linear stem actuator 24V RWA stroke 200mm
3B20022	S80 linear stem actuator 24V RWA stroke 200mm (louvers)
3B20021	S80 linear stem actuator 24V RWA stroke 400mm
3B20023	S80 linear stem actuator 24V RWA stroke 400mm (louvers)

Note: feeding cable not included
Note: specific software version for louvers application

Description for top-hung windows application

3B20021	S80 linear stem actuator 24V RWA stroke 400mm
	Actuator supporting bracket for top hung windows
	Standard connector
	Fitting and spare parts for top hung windows

Description for louvers application

3B20022	S80 linear stem actuator 24V RWA stroke 200mm
	Actuator supporting bracket for louvers
	Standard connector
	Fitting and spare parts for louvers application

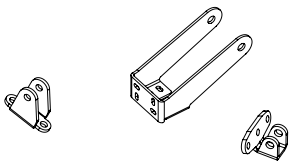

Accessories and spare parts

1B2801	Actuator supporting bracket
1B2802	Actuator supporting bracket for louvers
1S1604	Fitting bracket to the frame
3B2001	Spare parts for top hung windows
3B2002	Spare parts for louvers
3B2010	Standard connector
3B2015	90° connector
1B2121	RWA feeding cable for synchronization (2m)

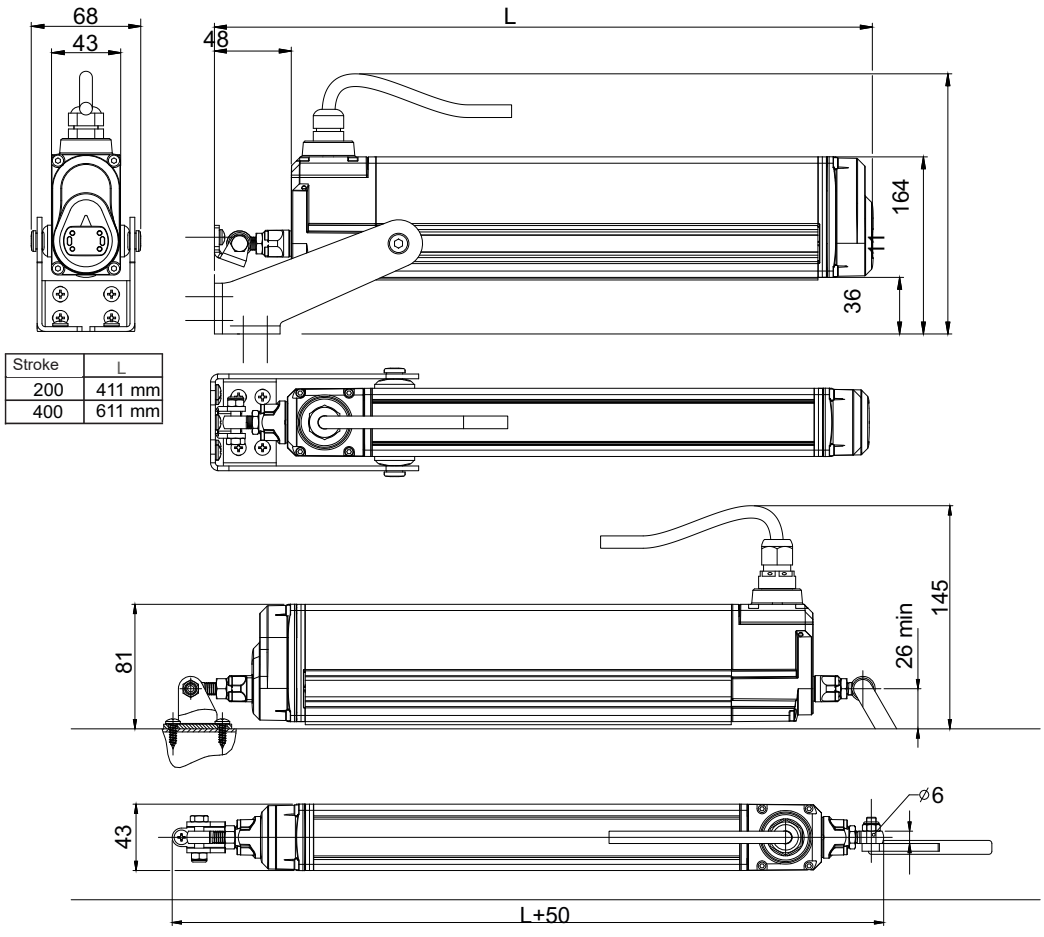

Stroke	L
200	411 mm
400	611 mm

A90 RWA

Actuator for swing opening
Maximum angle 90°

PRODUCT DESCRIPTION

Electric actuators, models A90 and A90 RWA, with double-link articulated chain, contained in special aluminum casing, complete with accessories and special chain guide for 90-degree swing opening. Operation at 230V 50Hz or 24V operation. The actuator can be installed for both outward and inward swing opening. Available version for synchronization and simultaneous operation of two actuators installed on one window. The actuator or pair of actuators can also be combined with the M00 electro-lock, to ensure that the lwindow is hermetically sealed. CE-marked device and RWA 24V version verified according to EN12101-2 for smoke and heat evacuation systems.







Available with accessories for inward opening application

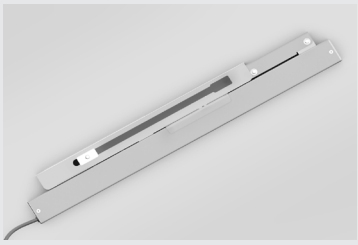

Available with accessories for outward opening application

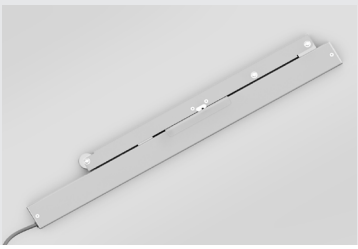

Available with accessories for use on free sash via scrolling wheel



TECHNICAL SPECIFICATIONS	A90 RWA 24V	A90 230V
Power voltage	24V d.c	230V ~ 50Hz
Max. initial force in thrust	400 N	400 N
Max. final force in traction	400 N	400 N
Maximum opening angle	90°	90°
Idle translation speed	13.3 mm/s	13.3 mm/s
Opening time	32 sec	32 sec
Absorbed current in opening	0.3 A	60 mA
Absorbed curent in closng	0.8 A	130 mA
Service type	S2 of 4 min	S2 of 4 min
Operating temperature	-5°C + 50°C	-5°C + 50°C
Protection Class	IP 30	IP 30
Synchronous operation of 2 actuators on the same window	YES	YES
Parallel connection option	YES	YES
Overlap from 0 to 50 mm with automatic learning	YES	YES
Dimensions	673 x 43 x 93 mm	673 x 43 x 93 mm

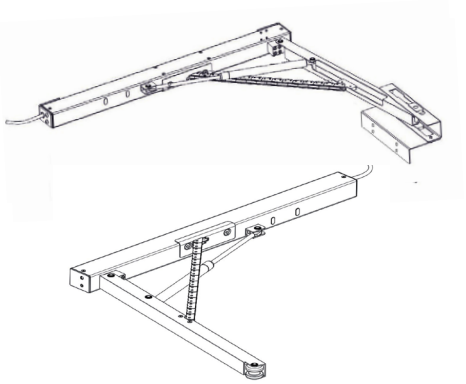

A90 Actuator for swing opening linked to the sash

3E46#	A90 actuator 230V inward 90 degrees swing opening
3E46#	A90 actuator 230V outward 90 degrees swing opening
3E47#	A90 RWA actuator 24V inward 90 degrees swing opening
3E47#	A90 RWA actuator 24V outward 90 degrees swing opening

Note: Version for synchronized installation of 2 actuators on the same window available upon request.

A90 Actuator for swing opening free from the sash (via scrolling wheel)

3E46#	A90 actuator 230V inward 90 degrees swing opening
3E46#	A90 actuator 230V outward 90 degrees swing opening
3E47#	A90 RWA actuator 24V inward 90 degrees swing opening
3E47#	A90 RWA actuator 24V outward 90 degrees swing opening

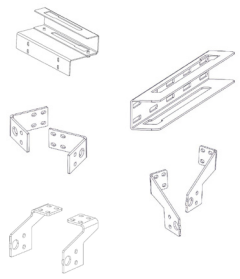

Accessories and spare parts

3E4601	Sash bracket for inward opening
3E4602	Sash bracket for outward opening
3E4603	Actuator brackets kit for inward opening
3E4604	Actuator brackets kit for outward opening
3E4605	Actuator brackets kit for ceiling mounting

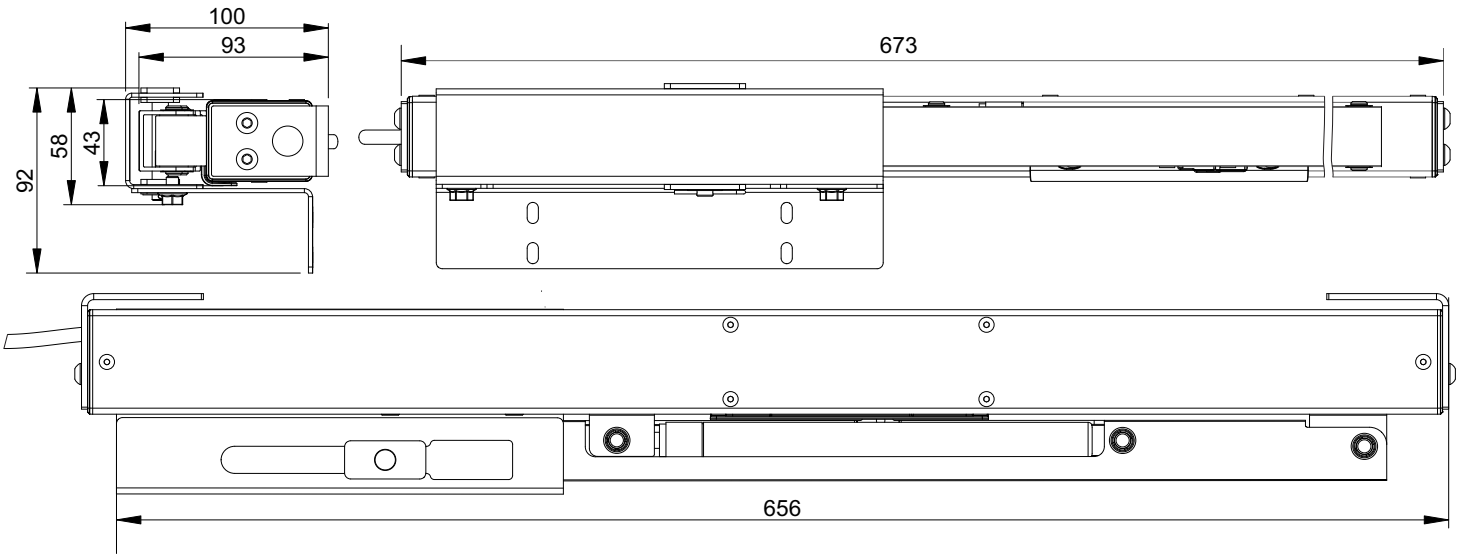

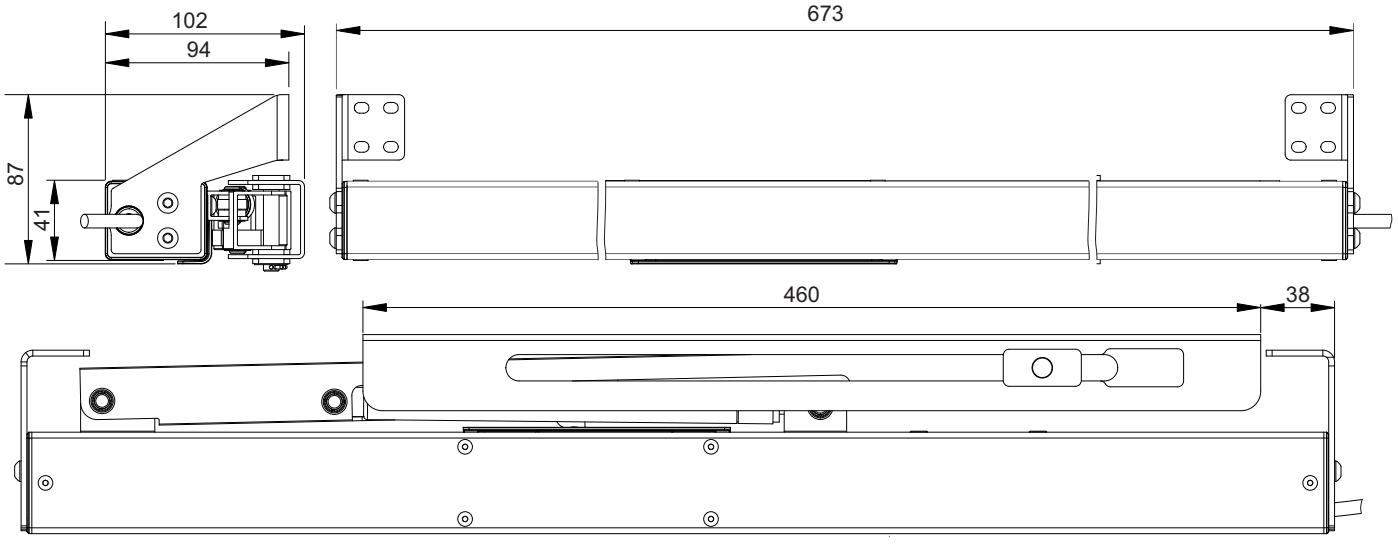

M00

Multi-point lock drive
Max. load 600N
adjustable stroke 18-36 mm

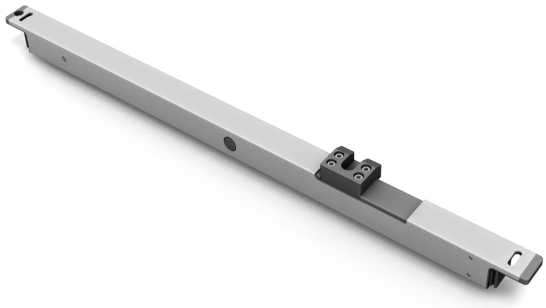

PRODUCT DESCRIPTION

TOPP electric actuator M00 for window's multi-point lock movement, with minimum overall dimensions to allow an installation concealed inside the profile or exposed on the frame. Operation at 24V DC. Maximum applicable load 600N. Multi-point pin movement stroke 18 and 36mm (the drive horizontally moves the pin of the frame hardware to allow the hermetic locking of the window in multiple points). It can be combined with TOPP chain actuators. CE-marked device verified according to EN12101-2 for smoke and heat evacuation systems.



Multi-point lock drive concealable inside the frame profile.



Pin movement adjustable to 18 mm or 36 mm stroke.



Emergency release



TECHNICAL SPECIFICATIONS	M00
Power supply voltage	24V d.c.
Multi-point maximum load	600 N
Strokes	n.d.
Locking pin stroke	18 mm / 36 mm
Absorbed current	1,5 A with chain actuator combined (C20)
Locking pin speed at max. load	1,0 mm/s
Protection against electric shock	Class III
Service Type	S2 of 2 min
Operating temperature	-10°C +60°C
Protection Class	IP 32

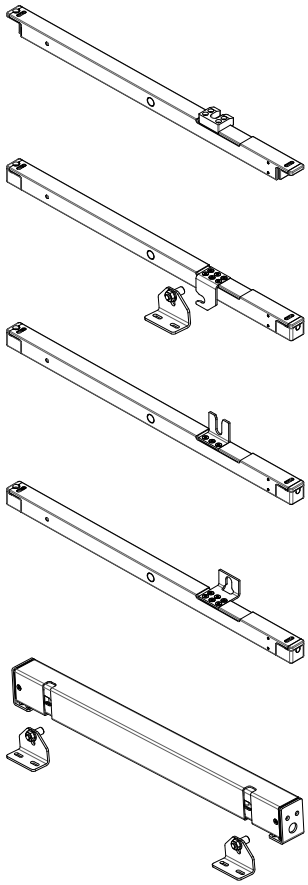

M00 Concealed multi-point lock drive for inward or outward opening (for windows with hardware - milling required)

3E10#	M00 Concealed multi-point lock drive

M00-1 Electric lock exposed on the frame for inward or outward opening (for windows without hardware - milling not required)

3E10#	M00-1 Exposed electric lock for windows without hardware

M00-2 Multi-point lock drive exposed on the sash to open inwards or on the frame to open outwards (for windows with hardware - milling necessary)

3E10#	M00-2 Multi-point lock drive exposed on the sash to open inwards or on the frame to open outwards

M00-3 Multi-point lock drive exposed on the frame for inward opening (for windows with hardware - milling not required)

3E10#	M00-3 Multi-point lock drive exposed on the frame for inward opening

M00-4 Double electric lock exposed on the frame for inward opening (for windows without hardware - milling not required)

3E10#	M00-4 Double electric lock exposed on the frame for inward opening

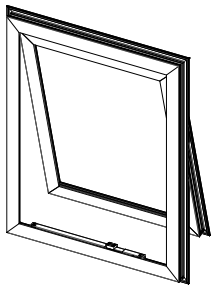

M00

Concealed multi-point lock drive for inward or outward opening

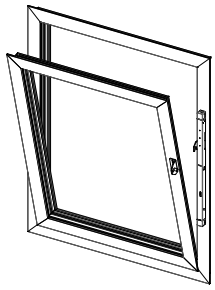

M00-1

Electric lock exposed on the frame for inward or outward opening

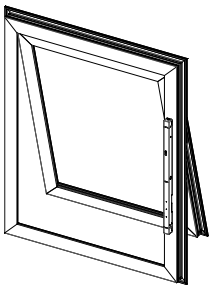

M00-2

Multi-point lock drive exposed on the frame for outward opening

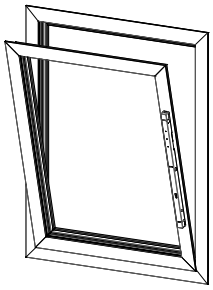

M00-2

Multi-point lock drive exposed on the sash for inward opening

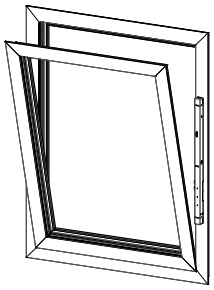

M00-3

Multi-point lock drive exposed on the frame for inward opening

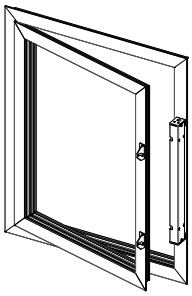

M00-4

Double electric lock exposed on the frame for inward opening

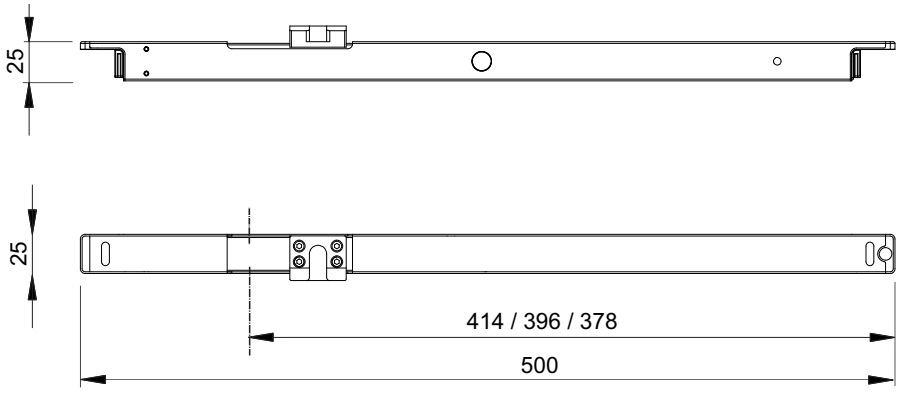

RWA Control units

RWZ control units for smoke and heat evacuation systems.



PRODUCT DESCRIPTION

The control units for smoke and heat evacuation have the following specifications and meet the following requirements (some technical characteristics may vary according to the RWZ control unit model):



- Output for the connection of 24V actuators.
- VdS approved according to the VdS 2581 and VdS 2593 directives.
- Internal power supply certified according to DIN EN 12101-10.
- Control unit tested according to ISO 21927-9.
- 3 signal lines:
  - Automatic fire detector
  - RT2 manual emergency push button with indicators for operation, alarm, malfunction and reset button
  - Connection to a fire alarm control panel or additional automation fire detectors
- Alarm Reset using the RT2 button or in the control centre.
- Selectable functions:
  - “Auto-close” (automatic closure after resetting an alarm)
  - “Malfunction = Alarm” (alarm upon malfunction of a signal line)
  - “Automatic OFF” (the automatic commands - apart from the alarm - are disabled)
  - “Thermal alarm” (alarm on exceeding temperature of 70 °C inside the enclosure)
- Possibility of connecting ventilation buttons
- Adjustable ventilation and time positions
- Possibility of connecting an external wind and rain control
- Normal operation, alarm and malfunction displayed on the emergency push button
- Internal service display showing detailed status information for installation and maintenance.
- Plug-in connection terminals (apart from actuator output).
- Upon direct reverse of travel, actuators are briefly stopped before changing the sense.
- Sheet steel enclosure, light grey (RAL 7035).



TECHNICAL SPECIFICATIONS	RWZ 1-4b	RWZ 4-8d	RWZ 5-20f	RWZ 5-40f
Power supply voltage	230V~50Hz.			
Output voltage	24 v			
Max absorbed current	0,7 A	1,1 A	2,5 A	5,0 A
Max output current	4 A	8 A	20 A	40 A
Battery	2 x 2Ah/12V	2 x 7Ah/12V	2 x 12Ah/12 V	2 x 17Ah/12V
Service type	S1 - continuous			
Pre-set for	wind sensor, rain detector, push button			
Operating temperature	- 5°C + 40°C			
Dimensions (mm)	337x337x113	400x400x135	430x525x185	430x525x185
Connectable number of actuators:				
C50 RWA	3	6	16	32
C160 RWA stroke 360mm	8	16	40	80
C160 RWA stroke 600mm	6	12	30	60
C160 RWA double chain stroke 360mm	5	10	25	50
C160 RWA double chain stroke 600mm	1	3	9	18
ACK4 RWA	2	5	12	24
ACK4S RWA (Bottom hung)	3	6	16	32
ACK4S RWA (Top hung and skylight)	2	4	10	20
S80 RWA	3	6	16	32
A90 RWA	3	6	16	32

Rwa control units

8C0040	RWZ 1-4b Control and power unit for the connection of 24V actuators max 4A - 2,0Ah Batteries included EN 12101-10 / ISO 21927-9 certified
8C0041	RWZ 4-8d Control and power unit for the connection of 24V actuators max 8A - 7,0Ah Batteries included EN 12101-10 / ISO 21927-9 certified
8C0047	RWZ 5-20f Control and power unit for the connection of 24V actuators max 20A - 12,0Ah Batteries included EN 12101-10 / ISO 21927-9 certified
8C0048	RWZ 5-40f Control and power unit for the connection of 24V actuators max 40A - 17,0Ah Batteries included EN 12101-10 / ISO 21927-9 certified
8C0044	TF RWZ connection unit for wind and rain detectors.
8C0255	PK dry contact for alarm / malfunction forwarding
8C0258	PK-SA dry contact for open status forwarding (for RWZ control units except 1-4b and 4-8d)
8C0045	WTM Output for controlling external warning devices in case of alarm or malfunction (i.e. MS4 multi-tone sound alarm and BL4 strobe - for RWZ control units except 1-4b)

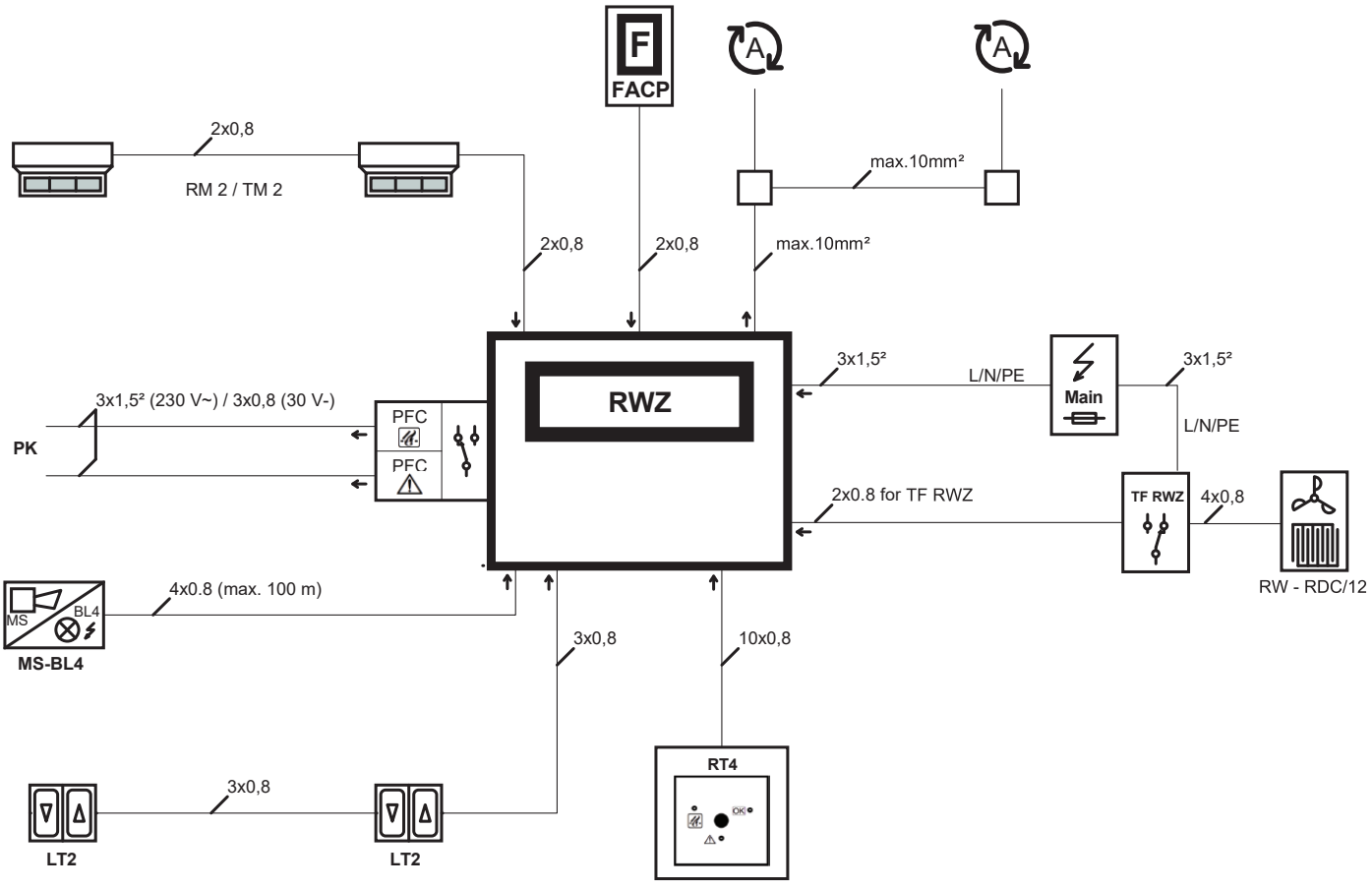

RW RDC RM2 TM2 RT4 MS4 BL4

Detectors and emergency devices

RW Wind sensor
The wind sensor, connected to TOPP control units, closes the windows when the wind speed exceeds a preset value. Contained in weatherpro- of plastic housing, with rotating blade system sensing wind speed.



RDC/12 Rain sensor
The RDC/12 rain sensor, like the wind sensor, must be placed outside, exposed to rainfalls. It can be connected to the TOPP control units TF23R, TF33R, TF24R, TF44R, RR and TF RWZ to operate the windows automatic closure when the sensor is wet. Insensitive to dew and humidity.

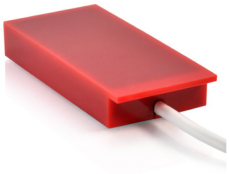

RM2 Smoke detectors
The RM2 optical smoke detectors, for the connection to the RWZ control panels, are devices for indoor smoke detection complying with the UNI 54 standard.



TM2 Thermovelocimetric detectors
The TM2 thermovelocimetric detectors, for the connection to the RWZ control panels, are made of a static element set at 75° and provides an immediate response to rapid increases in temperature.
Certified according to UNI EN 54 standard.



RT4 Emergency push button
The RT4 emergency push button, for the connection to the RWZ control panels, is an emergency push button that displays normal operation, alarm and malfunction.



MS-BL4 Sound alarm and strobe
MS-BL4 is a multiple-tone sounder with strobe light
(for RWZ control panels)



Detectors and emergency devices

8E0030	RW Wind sensor
8E0054	RDC/12 12V Rain sensor, incl. roof fixing adhesive tape (for TF23R/TF33R/TF24R/TF44R/RR/TFRWZ)
0B0020	Special adjustable bracket RDC/12
8C0244	RT4 Emergency push button with indication of working, alarm and malfunction. Aluminum case orange color
8C0243	RT4-K Emergency push button with indication of working, alarm, open status, malfunction and integrated open/close switch. Aluminum case orange color.
8C0249	LT2-A Ventilation push button with indication open status
8C0257	KE-2a Contact for command extension
8C0248	RM2 Optical smoke detector
8C0247	TM2 75° Thermovelocimetric detector
8E0500	MS-BL4 Multiple-tone sounder with strobe light



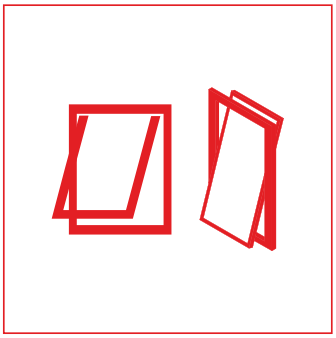

WINDOW AUTOMATION

	C20	C30	C40	C50-C50 RWA	C60	ACK4-ACK4 RWA	C130	C160-C160 RWA	C240	C260-C160 RWA DOUBLE CHAIN	S80-S80 RWA	T50
Max. load in thrust (N)	300	300	400	500	300	300	300	300	400	600	800	500
Max. load in traction (N)	200	300	400	500	200	300	200	200	300	600	800	500
Max. stroke (mm)	360	380	500	1000	600	400	360	1000	360	360	1000	1000
Stroke selection (positions)	2	2	7	-	2	7	-	-	-	-	●	7
Frame adjustment range (mm)	>100	30	100	>100	>100	10 (+30)	>100	>100	>100	>100	>100	>100
Self-learning adjustment in closing	●	○	●	-	●	○	●	●	●	●	-	○
2 push points on same window	○	○	○	○	-	○	○	○	●	●	○	○
Synchronization by microprocessor	-	○	○	○	-	○	-	-	-	-	○	○
Quick hooking to the window frame	●	●	●	-	-	-	●	-	●	-	-	-
Central chain	●	●	●	-	-	●	●	○	○	○	-	-
Swivel brackets	●	●	●	●	●	○	●	●	●	●	●	●
Brackets for top hinged windows	●	●	●	●	●	●	●	●	●	●	●	●
Brackets for bottom hinged windows	●	●	●	○	●	●	○	○	○	○	-	-
Brackets for roof windows/skylights	○	○	○	○	○	○	○	○	○	○	●	●
Brackets for swing windows	○	-	-	○	○	-	○	○	○	○	●	●
Brackets for louvers	-	-	-	-	-	-	-	-	-	-	○	-
Wrong installation warning device	-	●	●	-	-	●	-	-	-	-	-	●
Double insulation	●	●	●	●	●	●	●	●	●	●	●	●
0.5 meter power cable	-	-	-	-	-	-	-	-	-	-	-	-
1.5 meter power cable	●	●	●	●	●	●	●	●	●	●	○	●
Above 1.5 meter power cable	○	○	○	○	○	○	○	○	○	○	○	○
RWA	-	-	-	○	-	○	-	○	-	○	○	-
On board receiver	-	○	-	-	-	-	○	○	○	○	-	-
IP 55 or higher	-	-	●	-	-	●	-	-	-	-	●	●
Stainless steel chain	-	-	-	-	-	●	-	-	-	-	-	-
Customizable width of the actuator	-	-	-	-	-	-	●	○	●	●	-	-
Automation height (mm)	34	49	50	40	34	48	46	46	46	46	128	94
Automation depth (mm)	48	80	95	55	48	83	80	80	80	80	43	62
Automation max. width (mm)	362	337	388	1011	470	288	1200	735	4000	4000	1271	1030

Legend

● Included
○ Optional
- Not available



TECHNICAL REMARKS

How to choose the right actuator

The selection of the right window actuator is very important and should allow to get maximum results.
The following technical details are to guide you in your final choice of actuator and should be considered before any decision is made.
There are mainly two types of actuators: linear / rack actuators (rigid rod) and chain actuators (flexible chain).
The linear / rack actuator can offer great performance and push high loads, but has a requirement both physical and aesthetic which is not always acceptable. The actuator body has to move in a pivoting motion from its brackets, therefore it is necessary to verify that there are no abstacles to its rotational movement.
If a rod actuator is unsuitable, a chain actuator must be used, subject to weight restrictions.
The chain actuator operates generally at lower thrust power and requires a limited space, as well as being aesthetically pleasing.
For windows having a width larger than 1500-2000 mm, a single actuator is not enough.
With this size the window and the safety of the installation require the application of more than one actuator, usually linked to a synchronization device.





FORMULAS TO CALCULATE TRACTION AND THRUST FORCE (kg)

Horizontal windows

F = Required force for opening and closing (kg)
P = Window sash weight (kg)

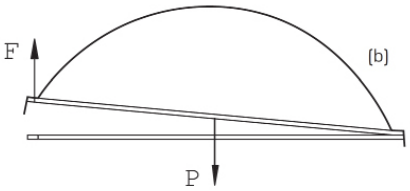

F = 0,54.P

Top hug windows (a) or bottom hung windows (b)

F = Required force for opening and closing (kg)
P = Window sash weight (kg)
C = Window opening stroke (mm)
H = Window height (mm)

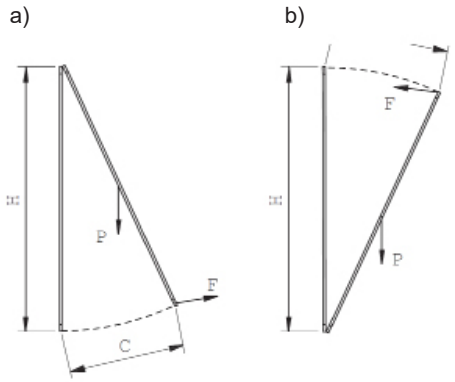

F = (0,54.P) . (C/H)





NOTES:

NOTES:

PRODUCTOS LOS ENCUENTRAS EN:

COMERCIAL DIPEL

+56 2 24035858
www.dipel.cl
Av. Grecia #2170, Ñuñoa
ventas@dipel.cl

TOPP SRL
Società a socio unico soggetta a direzione e coordinamento di 2 Plus 3 Holding S.p.a.
via Galvani 59, 36066 Sandrigo (VI) tel. +39 0444 656700 fax +39 0444 656701
www.topp.it info@topp.it

Rev.4, September 2025

TOPP
tecnologie del movimento

70%
FSC
www.fsc.org
MIX
Paper | Supporting responsible forestry
FSC® C131005











TOPP SRL
Società a socio unico soggetta a direzione e coordinamento
di 2 Plus 3 Holding S.p.a.
via Galvani 59, 36066 Sandrigo (VI)
tel. +39 0444 656700 fax +39 0444 656701
info@topp.it **www.topp.it**

